Motor Circuit Controllers

Series KT9 Motor Circuit Controllers *F1:2*
- *Series KTA9 Base Units* *F1:4*
- *Series KTC9 Base Units* *F1:6*
- *Series KTB9 Base Units* *F1:8*
- *Series KTV9 Base Units* *F1:10*
- *Accessories* *F1:12*
- *Technical Information* *F1:19*
- *Dimensions* *F1:26*

Series KTU9 UL489 Molded Case Circuit Breakers *F2:1*
- *Accessories* *F2:3*
- *Technical Information* *F2:5*
- *Dimensions & Wiring Diagrams* *F2:10*

Ecombo and EcomboPlus Starters *F3:2*
- *CLE-8 / CLUE-8 Ecombo Starters* *F3:4*
- *CLE-7 / CLUE-7 Ecombo Starters* *F3:6*
- *CLS-7 / CLUS-7 EcomboPlus Starters* *F3:10*
- *CLE-7 / CLUE-7 Three Component ECombo Starters* *F3:14*
- *Technical Information* *F3:17*
- *Wiring Diagrams* *F3:21*
- *Dimensions* *F3:22*

Enclosed Motor Controllers and Molded Case Circuit Breakers *F4:1*
- *KT9 Type-E Manual Combination Controller* *F4:2*
- *KTA9 Explosion-proof Motor Controllers* *F4:6*
- *KTU9 Molded Case Circuit Breakers* *F4:8*
- *CX7 Ecombo KWIKstarters* *F4:12*
- *CX7 Combination Controllers* *F4:19*
- *CX7 Explosion-proof Controllers* *F4:24*
- *CX7 Type E/F Simplex & Duplex Pump Controllers* *F4:25*
- *Custom Multi-Starter Control Panels* *F4:28*
- *Wiring Diagrams* *F4:30*
- *Dimensions* *F4:33*

Series KT5 Manual Motor Controllers *F5:1*
- *Accessories* *F5:3*
- *Technical Information* *F5:6*
- *Wiring Diagrams* *F5:12*
- *Dimensions* *F5:13*

Series KT9 Motor Circuit Controllers

Versatile, convenient and space saving... for a variety of applications

See our online white paper

Methods of Applying KT9 Motor Circuit Controllers

Sprecher + Schuh's KT9 Series of Motor Protection Circuit Breakers (MPCBs) or Motor Protective Switching Devices (MPSDs) are UL Listed as Manual, Self-Protected Combination Motor Controllers (Type E) and Manual Motor Controllers (with approvals for Suitable as Motor Disconnect and Suitable for use in Group Installation).

When UL/CSA Listed as Manual, Self-Protected Combination Motor Controllers, the KT9 Motor Protection Circuit Breakers provide all of the necessary NEC/CEC requirements for the protection and control of individual Motor Branch Circuits without additional branch circuit protective devices. According to UL 60947-4-1, CSA C22.2 No.60947-4-1, these devices may provide the following control and protection functions.

- Disconnect for motor branch circuit
- Short-circuit Protection (magnetic protection)
- Overload protection (thermal protection)
- Manual switching (motor control means)

Group motor installations eliminate the need for individual branch short-circuit protective devices for each motor circuit, reducing panel space, installation and wiring time, and costs. There is only one Branch Circuit Protective Device (BCPD) for the "Group". Series KT9 devices are also UL Listed for Tap Conductor protection in group installations, which helps reduce conductor sizing. According to UL 60947-4-1, CSA C22.2 No.60947-4-1, these devices these devices certified for group motor installation may provide the following control and protection functions.

- Disconnect for motor branch circuit
- Overload protection (thermal protection)
- Manual switching (motor control means)

KT9s meet UL requirements for Type E manual motor controllers and "at-motor disconnects"

45mm (≈1 3/4")

0.10...32A
Standard Interrupting Capacity
KTA9-32S

45mm (≈1 3/4")

0.40...40A
High Interrupting Capacity
KTA/C9-40H

45mm (≈1 3/4")

0.16...40A
High Interrupting Capacity
KTB9-40H

Series KT9 devices meet requirement of Motor Protective Switching Devices (MPSD) according to IEC 60947-4-1 and Circuit Beaker according to IEC 60947-2 standard for application outside of North America. These devices provide the following functions.

- Disconnect for motor branch circuit
- Short-circuit Protection (magnetic protection)
- Overload protection (thermal protection)
- Manual switching (motor control means)

KT9 devices provide Trip Class 10 overload protection and phase loss sensitivity protection. These are suitable for single- and three- phase applications. Cat. No. KTV9 devices can also be applied at the output of a variable frequency drive (VFD) in multi-motor applications.

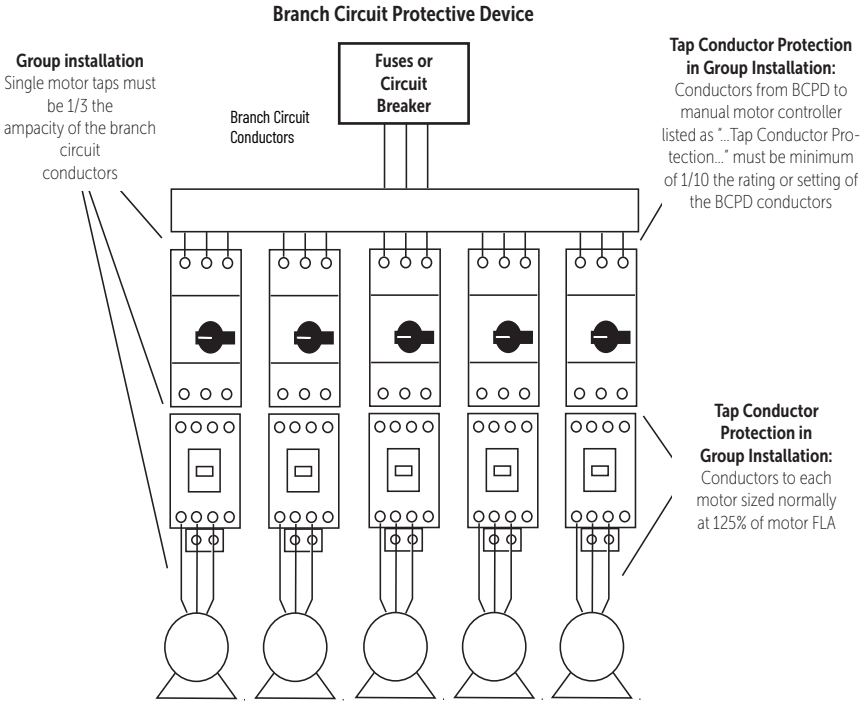

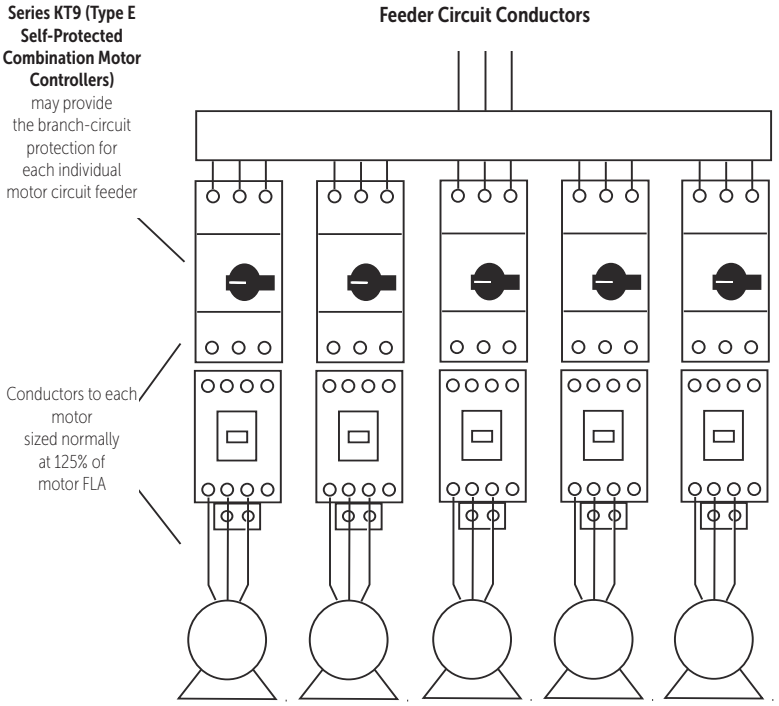

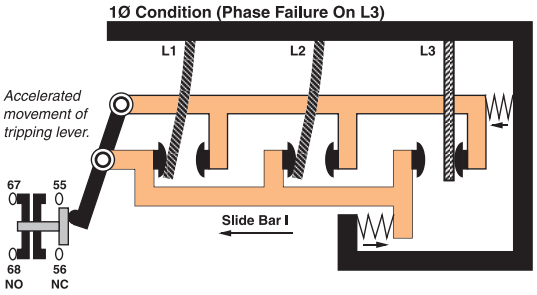

All KT9 Motor Circuit Controllers offer accelerated tripping under single phase conditions

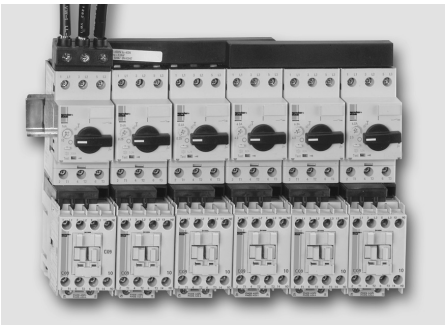

Using KT9s in Multi-Motor Starter applications can replace classic Branch Circuit Protection Devices and reduce panel space up to 60%

KTA9 Base Unit

Typical Three Phase [HP]				Current Adjustment Range [A]	Magnetic Release Response Current [A]	Catalog Number
200V	230V	460V	575V			
KTA9-32S Adjustable Thermal/Fixed Magnetic (14 x In)						
~	~	~	~	0.10...0.16	2.2	**KTA9-32S-0.16A**
~	~	~	~	0.16...0.25	3.5	**KTA9-32S-0.25A**
~	~	~	~	0.25...0.40	5.6	**KTA9-32S-0.40A**
~	~	~	~	0.40...0.63	8.8	**KTA9-32S-0.63A**
~	~	1/2	1/2	0.63...1.0	14	**KTA9-32S-1.0A**
~	~	3/4	~	1.0...1.6	22	**KTA9-32S-1.6A**
1/2	1/2	1	1-1/2	1.6...2.5	35	**KTA9-32S-2.5A**
3/4	3/4	2	3	2.5...4.0	56	**KTA9-32S-4.0A**
1	1-1/2	3	5	4.0...6.3	88	**KTA9-32S-6.3A**
2	2	5	7-1/2	6.3...10	140	**KTA9-32S-10A**
3	5	10	10	10...16	224	**KTA9-32S-16A**
5	5	10	15	14.5...20	280	**KTA9-32S-20A**
5	7-1/2	15	20	18...25	350	**KTA9-32S-25A**
7-1/2	10	20	25	23...29	406	**KTA9-32S-29A**
7-1/2	10	20	30	26.5...32	448	**KTA9-32S-32A**
KTA9-40H Adjustable Thermal/Fixed Magnetic (14 x In)						
~	~	~	~	0.40...0.63	8.8	**KTA9-4OH-0.63A**
~	~	1/2	1/2	0.62...1.0	14	**KTA9-4OH-1.0A**
~	~	3/4	~	1.0...1.6	22	**KTA9-4OH-1.6A**
1/2	1/2	1	1-1/2	1.6...2.5	35	**KTA9-4OH-2.5A**
3/4	3/4	2	3	2.5...4.0	56	**KTA9-4OH-4.0A**
1	1-1/2	3	5	4.0...6.3	88	**KTA9-4OH-6.3A**
2	2	5	7-1/2	6.3...10	140	**KTA9-4OH-10A**
3	5	10	10	10...16	224	**KTA9-4OH-16A**
5	5	10	15	14.5...20	280	**KTA9-4OH-20A**
5	7-1/2	15	20	18...25	350	**KTA9-4OH-25A**
7-1/2	10	20	25	23...29	406	**KTA9-4OH-29A**
7-1/2	10	20	30	26.5...32	448	**KTA9-4OH-32A**
10	10	25	30	30...36	432	**KTA9-4OH-36A**
10	10	30	30	34...40	480	**KTA9-4OH-40A**
KTA7-45H Adjustable Thermal/Fixed Magnetic (13 x In)						
2	3	5	7-1/2	6.3...10	130	**KTA7-45H-10A**
3	5	10	10	10...16	208	**KTA7-45H-16A**
5	5	10	15	14.5...20	260	**KTA7-45H-20A**
7-1/2	7-1/2	15	20	18...25	325	**KTA7-45H-25A**
7-1/2	10	20	30	23...32	416	**KTA7-45H-32A**
10	15	30	40	32...45	585	**KTA7-45H-45A**

Horsepower ratings shown in the table are for reference only. The final selection of the controller depends on the actual motor full load current and service factor.

- *For motor with service factor less than 1.15.* Use motor nameplate full load current times 0.9 and choose the motor starter with the appropriate current range. Example: Motor F.L.C. = 4.2A; S.F. = 1.0. – 4.2A x 0.9 = 3.78A. Select Catalog Number KTA9-32S-4.0A.

Catalog Number KTA9-32S

Catalog Number KTA9-40H

Catalog Number KTA7-45H

KTA9 UL Ratings Application Chart

Device	Manual Controller for Group Installation ❶			Manual Controller as Motor Disconnect ❷		Suitable for Tap Conductor Protection		Self-Protected Type E Manual Combination Controller ❸❹	
	Max. Fuse or Circuit Breaker	Max. Short Circuit Current [kA]		Max. Short Circuit Current [kA]		Max. Short Circuit Current [kA]		Max. Short Circuit Current [kA]	
		480V	600V	480V	600V	480Y/277V	600Y/347V	480Y/277V	600Y/347V
KTA9-32S — Standard Interrupting Capacity									
KTA9-32S-0.16A	450	65	50	65	50	65	50	65	50
KTA9-32S-0.25A	450	65	50	65	50	65	50	65	50
KTA9-32S-0.40A	450	65	50	65	50	65	50	65	50
KTA9-32S-0.63A	450	65	50	65	50	65	50	65	50
KTA9-32S-1.0A	450	65	50	65	50	65	50	65	50
KTA9-32S-1.6A	450	65	50	65	50	65	50	65	50
KTA9-32S-2.5A	450	65	30	65	30	65	30	65	30
KTA9-32S-4.0A	450	65	30	65	30	65	30	65	30
KTA9-32S-6.3A	450	65	30	65	30	65	~	65	~
KTA9-32S-10A	450	65	30	65	30	65	~	65	~
KTA9-32S-16A	450	30	30	30	30	30	~	30	~
KTA9-32S-20A	450	30	30	30	10	~	~	~	~
KTA9-32S-25A	450	30	18	30	5	~	~	~	~
KTA9-32S-29A	450	30	10	10	~	~	~	~	~
KTA9-32S-32A	450	30	10	10	~	~	~	~	~
KTA9-40H — High Interrupting Capacity									
KTA9-40H-0.63A	450	65	50	65	50	65	50	65	50
KTA9-40H-1.0A	450	65	50	65	50	65	50	65	50
KTA9-40H-1.6A	450	65	50	65	50	65	50	65	50
KTA9-40H-2.5A	450	65	30	65	30	65	30	65	30
KTA9-40H-4.0A	450	65	30	65	30	65	30	65	30
KTA9-40H-6.3A	450	65	30	65	30	65	30	65	30
KTA9-40H-10A	450	65	30	65	30	65	30	65	30
KTA9-40H-16A	450	30	30	65	30	65	30	65	30
KTA9-40H-20A	450	30	30	65	30	65	~	65	~
KTA9-40H-25A	450	50	30	50	30	50	~	50	~
KTA9-40H-29A	450	50	30	50	30	50	~	50	~
KTA9-40H-32A	450	50	30	30	18	30	~	30	~
KTA9-40H-36A	450	30	30	30	18	30	~	30	~
KTA9-40H-40A	450	30	30	30	18	30	~	30	~
KTA7-45H — High Interrupting Capacity									
KTA7-45H-10A	600	65	30	65	30	65	30	65	30
KTA7-45H-16A	600	65	30	65	30	65	30	65	30
KTA7-45H-20A	600	65	30	65	30	65	30	65	30
KTA7-45H-25A	600	65	30	65	30	65	30	65	30
KTA7-45H-32A	600	65	30	65	30	65	30	65	30
KTA7-45H-45A	600	65	18	65	18	65	~	65	~

❶ UL 508, CSA 22.2 No. 14 for group installation, in connection with short-circuit protection device.
❷ UL 508 Part III.
❸ UL 508 Part IV.
❹ Type E applications require use of the KT9/7-xx-TE terminal adaptor on KT9s and KT7s. Alternatively, the selection of a KT9/7 compact busbar supply block meet Type E requirements for terminal spacing.

It should be noted that the KT9/7 Manual Motor Circuit Controller, when listed as a self-protected (Type E) device, is rated for Wye-connected power systems for voltages above 240 volts (i.e. 480Y/277 volts common in the United States or 600Y/347 volts common in Canada).

KTC9 Base Unit

Maximum Horsepower Typical Three Phase [HP] 200V	230V	460V	575V	Current Adjustment Range [A]	Magnetic Release Response Current [A]	Catalog Number
KTC9-40H – High Interrupting Capacity						
~	~	~	~	0.10...0.16	3.2	**KTC9-40H-0.16A**
~	~	~	~	0.16...0.25	5.5	**KTC9-40H-0.25A**
~	~	~	~	0.25...0.40	8.8	**KTC9-40H-0.40A**
~	~	~	~	0.40...0.63	14	**KTC9-40H-0.63A**
~	~	1/2	1/2	0.63...1.0	22	**KTC9-40H-1.0A**
~	~	3/4	~	1.0...1.6	35	**KTC9-40H-1.6A**
1/2	1/2	1	1-1/2	1.6...2.5	55	**KTC9-40H-2.5A**
3/4	3/4	2	3	2.5...4	88	**KTC9-40H-4.0A**
1	1-1/2	3	5	4...6.3	139	**KTC9-40H-6.3A**
2	2	5	7-1/2	6.3...10	220	**KTC9-40H-10A**
3	5	10	10	10...16	320	**KTC9-40H-16A**
5	5	10	15	14.5...2	400	**KTC9-40H-20A**
5	7-1/2	15	20	18...25	450	**KTC9-40H-25A**
KTC7-45H – High Interrupting Capacity						
7-1/2	7-1/2	15	20	18...25	416	**KTC7-45H-25A**
7-1/2	10	20	30	23...32	585	**KTC7-45H-32A**

Horsepower ratings shown in the table are for reference only. *The final selection of the controller depends on the actual motor full load current and service factor.*

- *For motor with service factor less than 1.15.* Use motor nameplate full load current times 0.9 and choose the motor starter with the appropriate current range. Example: Motor F.L.C. = 4.2A; S.F. = 1.0. – 4.2A x 0.9 = 3.78A. Select Catalog Number KTC9-40H-4.0A.

KTC9-40H

Description

- The KTC9 has a fixed magnetic trip set at 18...22x the maximum value of the current adjustment range (as opposed to the KTA9s magnetic trip of approximately 14x adjustment range.) KTC9 are typically used in applications where nuisance tripping might occur, as with some high efficiency motors.

KTC9 UL Ratings Application Chart

Device	Manual Controller for Group Installation ❶			Manual Controller as Motor Disconnect ❷		Suitable for Tap Conductor Protection		Self-Protected Type E Manual Combination Controller ❸❹	
	Max. Fuse or Circuit Breaker	Max. Short Circuit Current [kA]		Max. Short Circuit Current [kA]		Max. Short Circuit Current [kA]		Max. Short Circuit Current [kA]	
		480V	600V	480V	600V	480Y/277V	600Y/347V	480Y/277V	600Y/347V
KTC9-40H — High Interrupting Capacity									
KTC9-40H-0.16A	450	65	50	65	50	65	47	65	50
KTC9-40H-0.25A	450	65	50	65	50	65	47	65	50
KTC9-40H-0.40A	450	65	50	65	50	65	47	65	50
KTC9-40H-0.63A	450	65	50	65	50	65	47	65	50
KTC9-40H-1.0A	450	65	50	65	50	65	47	65	50
KTC9-40H-1.6A	450	65	50	65	50	65	30	65	50
KTC9-40H-2.5A	450	65	30	65	30	65	30	65	30
KTC9-40H-4.0A	450	65	30	65	30	65	30	65	30
KTC9-40H-6.3A	450	65	30	65	30	65	30	65	30
KTC9-40H-10A	450	65	30	65	30	65	30	65	30
KTC9-40H-16A	450	65	30	65	18	65	30	65	~
KTC9-40H-20A	450	65	30	65	30	65	~	65	~
KTC9-40H-25A	450	50	30	50	30	50	~	50	~
KTC7-45H — High Interrupting Capacity									
KTC7-45H-25A	600	65	30	65	30	65	30	65	30
KTC7-45H-32A	600	65	18	65	18	65	18	65	18

❶ UL 508, CSA 22.2 No. 14 for group installation, in connection with short-circuit protection device.
❷ UL 508 Part III.
❸ UL 508 Part IV.
❹ Type E applications require use of the KT9/7-xx-TE terminal adaptor on KT9s and KT7s. Alternatively, the selection of a KT9/7 compact busbar supply block meet Type E requirements for terminal spacing.

It should be noted that the KT9/7 Manual Motor Circuit Controller, when listed as a self-protected (Type E) device, is rated for Wye-connected power systems for voltages above 240 volts (i.e. 480Y/277 volts common in the United States or 600Y/347 volts common in Canada).

KTB9 Base Unit ❷

Maximum Horsepower Typical Three Phase [HP]				❶ Rated Operational Current [A]	Magnetic Release Response Current [A]	Catalog Number
200V	230V	460V	575V			
KTB9-40H – High Interrupting Capacity						
~	~	~	~	0.16	2.2	**KTB9-40H-0.16A**
~	~	~	~	0.25	3.5	**KTB9-40H-0.25A**
~	~	~	~	0.40	5.6	**KTB9-40H-0.40A**
~	~	~	~	0.63	8.8	**KTB9-40H-0.63A**
~	~	1/2	1/2	1.0	14	**KTB9-40H-1.0A**
~	~	3/4	~	1.6	22	**KTB9-40H-1.6A**
1/2	1/2	1	1-1/2	2.5	35	**KTB9-40H-2.5A**
3/4	3/4	2	3	4	52	**KTB9-40H-4.0A**
1	1-1/2	3	5	6.3	88	**KTB9-40H-6.3A**
2	2	5	7-1/2	10	130	**KTB9-40H-10A**
3	5	10	10	16	208	**KTB9-40H-16A**
5	5	10	15	20	280	**KTB9-40H-20A**
5	7-1/2	15	20	25	325	**KTB9-40H-25A**
7-1/2	10	20	25	29	406	**KTB9-40H-29A**
7-1/2	10	20	30	32	448	**KTB9-40H-32A**
10	10	25	30	36	432	**KTB9-40H-36A**
10	10	30	30	40	480	**KTB9-40H-40A**
KTB7-45H — High Interrupting Capacity						
7-1/2	10	20	25	25	325	**KTB7-45H-25A**
7-1/2	10	25	30	32	416	**KTB7-45H-32A**
10	15	30	40	45	585	**KTB7-45H-45A**

KTB9-40H

Description

- The KTB9 is designed without a thermal trip element (i.e., current adjustment range). It should be selected for applications where a separate motor overload protection device is used, such as on CLE-7 Three Component Starters on page F3:13. Magnetic trip is approximately 14x operational current for the KTB9 (approximately 13x for the KTB7).

❶ APPLICATION NOTE: Product Selection for Heavy Duty Starting Applications using KTB9-40H and KTB7-45H Motor Circuit Controllers

The KTB9 / KTB7 Motor Circuit Controller is designed and tested to protect a motor circuit in case of a short circuit. A separate Sprecher + Schuh CEP7 overload relay with selectable trip class should be used to protect the motor against overload.

In Applications with motor starting times exceeding 10 seconds (heavy duty starting) the rated operational current (I_e) of the motor FLA must be multiplied by the following factors for selection of the KTB9 / KTB7 Motor Circuit Controller KTB9-40H and KTB7-45H.

Trip classes according to UL 508 Section 52 and IEC 60947-4-1
CLASS 10 = 1.00 CLASS 15 = 1.22 CLASS 20 = 1.42
CLASS 25 = 1.58 CLASS 30 = 1.73
The maximum number of motor starts in 25 cycles/hour with a minimum OFF-time of 120 seconds between cycles. This additional calculation and selecting a larger frame size is necessary to compensate (dissipate) the increased heat resulting from long acceleration applications effecting the rated operational current of the KTB9 / KTB7.

Application Example:
Motor 480 VAC, 10 HP, Ie 14 FLA
Heavy duty starting application with start time of up to 18 seconds

Solution:
Starting time up to 18 seconds requires dimensioning for CLASS 20.

- Selection of the Motor Circuit Controller for Short Circuit Protection: Multiply the rated operational current I_e with factor for CLASS 20: $I_e(20)$ = 14 A x 1.42 = 19.9 A
- Select corresponding Sprecher + Schuh KTB9-40H or KTB7-45H from catalog using next higher current rating: KTB9-40H-25A

❷ Horsepower ratings shown in the table are for reference only. The final selection of the controller depends on the actual motor full load current and service factor.

- **For motor with service factor less than 1.15. Use motor nameplate full load current times 0.9 and choose the motor starter with the appropriate current range. Example: Motor F.L.C. = 4.2A; S.F. = 1.0. – (4.2A x 0.9 = 3.78A). Select Catalog Number KTB9-40H-4.0A.**

KTB9 UL Ratings Application Chart

Device	Manual Controller for Group Installation			Manual Controller as Motor Disconnect		Suitable for Tap Conductor Protection	
	Max. Fuse or Circuit Breaker	Max. Short Circuit Current [kA]		Max. Short Circuit Current [kA]		Max. Short Circuit Current [kA]	
		480V	600V	480V	600V	480Y/277V ❶	600Y/347V ❶
KTB9-40H — High Interrupting Capacity							
KTB9-40H-0.16A	450	65	50	65	50	65	50
KTB9-40H-0.25A	450	65	50	65	50	65	50
KTB9-40H-0.40A	450	65	50	65	50	65	50
KTB9-40H-0.63A	450	65	50	65	50	65	50
KTB9-40H-1.0A	450	65	50	65	50	65	50
KTB9-40H-1.6A	450	65	50	65	50	65	50
KTB9-40H-2.5A	450	65	30	65	30	65	30
KTB9-40H-4.0A	450	65	30	65	30	65	30
KTB9-40H-6.3A	450	65	30	65	30	65	30
KTB9-40H-10A	450	65	30	65	30	65	30
KTB9-40H-16A	450	65	30	65	30	65	30
KTB9-40H-20A	450	65	30	65	30	65	~
KTB9-40H-25A	450	50	30	50	30	50	~
KTB9-40H-29A	450	50	30	50	30	50	~
KTB9-40H-32A	450	50	30	30	18	30	~
KTB9-40H-36A ❷	450	30	30	30	18	30	~
KTB9-40H-40A ❷	450	30	30	30	18	30	~
KTB7-45H — High Interrupting Capacity							
KTB7-45H-25A	600	65	30	65	30	~	~
KTB7-45H-32A	600	65	30	65	30	~	~
KTB7-45H-45A	600	65	18	65	18	~	~

❶ For full voltage (delta) ratings above 277V or 347V, follow the NEC or CEC rules for group motor applications.
❷ Suitable for continuous operation at 90% current rating at 480V only if used in a minimum enclosure size of 250 x 175 x 150 mm (10 x 7 x 6 in).

KTV9 Base Unit

Rated Operational Current (I_e)	Current Adjustment Range [A]	Nominal Magnetic Trip Current	Maximum Short Circuit Current [kA]		Maximum Horsepower Typical ❶❷ Three Phase [HP]				Catalog Number
[A]	[A]	[A]	480Y/277V Type E	480V (group motor)	200V	230V	460V	575V	
KTV9-40H – High Interrupting Capacity									
1.6	1.0...1.6	88	65	65	~	~	3/4	~	**KTV9-40H-1.6A**
2.5	1.6...2.5	88	65	65	1/2	1/2	1	~	**KTV9-40H-2.5A**
4.0	2.5...4.0	88	65	65	3/4	3/4	2	~	**KTV9-40H-4.0A**
6.3	4.0...6.3	88	65	65	1	1-1/2	3	~	**KTV9-40H-6.3A**
10	6.3...10	140	65	65	2	2	5	~	**KTV9-40H-10A**
16	10...16	224	65	65	3	5	10	~	**KTV9-40H-16A**
20	14.5...20	280	65	65	5	5	10	~	**KTV9-40H-20A**
25	18...25	350	50	50	5	7-1/2	15	~	**KTV9-40H-25A**
29	23...29	406	50	50	7-1/2	10	20	~	**KTV9-40H-29A**
32	26.5...32	448	30	50	7-1/2	10	20	~	**KTV9-40H-32A**
36	30...36	432	30	30	10	10	25	~	**KTV9-40H-36A ❸**
40	34...40	480	30	30	10	10	30	~	**KTV9-40H-40A ❸**

KTV9-40H

Description

- The Sprecher+Schuh KTV9 series motor controllers are suitable for two types of applications under cULus listings:
- (1) as a Manual, Self-protected Motor Controller or
- (2) as a Manual Motor Controller with approval for group installation (and as a motor disconnect)
- When UL/CSA listed as a manual, self-protected combination motor controller, the KTV9 provides all of the necessary NEC requirements for protection and control of individual motor branch circuits without additional protective devices (per NEC 430-52C option 6).
- When KTV9 devices are applied a manual motor controllers in group installations, then NEC group installation rules state these devices must be applied per the appropriate rules, which require the use of an upstream BCPD-branch circuit protection device (per NEC 430-53C option 2).
- The output frequency of the VFD must be limited to 400Hz or less to prevent thermal degradation. Various models of the KTV9 series self-protected combination motor controllers provide disconnection for motor branch circuits, branch-circuit and short-circuit protection (including magnetic protection), overload/ thermal protection and manual switching.
- The KTV9 self-protected combination motor controllers are current limiting and have a fixed magnetic trip. Interrupt ratings at 400V and 480V are available up to 65KaIC. The VFD output pulse-width modulation frequency must be limited to 4 kilohertz or less. The circuit breakers provide motor overload protection with a trip class 10 characteristic.

Horsepower ratings shown in the table are for reference only.
The final selection of the controller depends on the actual motor full load current and service factor.

- *For motor with service factor less than 1.15.* Use motor nameplate full load current times 0.9 and choose the motor starter with the appropriate current range. Example: Motor F.L.C. = 4.2A; S.F. = 1.0. – 4.2A x 0.9 = 3.78A. Select Catalog Number KTV9-40H-4.0A.

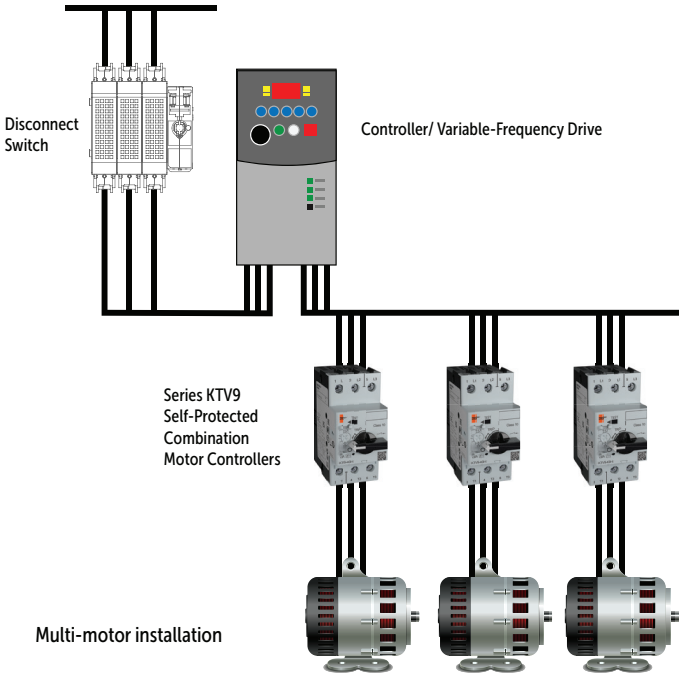

❶ HP ratings shown are for reference. Final selection of MPCB is determined by actual motor full load current.
❷ Not applicable at 575V.
❸ Suitable for continuous operation at 90% current rating at 480V only if used in a minimum enclosure size of 250 x 175 x 150mm (10 x 7 x 6 in.)

KTV9 UL Ratings Application Chart

Device	Manual Controller for Group Installation			Manual Controller as Motor Disconnect		Suitable for Tap Conductor Protection		Self-Protected Type E Manual Combination Controller	
	Max. Fuse or Circuit Breaker	Max. Short Circuit Current [kA]		Max. Short Circuit Current [kA]		Max. Short Circuit Current [kA]		Max. Short Circuit Current [kA]	
		480V	600V	480V	600V	480Y/277V ❶	600Y/347V ❶	480Y/277V ❶	600Y/347V ❶
KTV9-40H — High Interrupting Capacity									
KTV9-40H-1.6A	450	65	~	65	~	65	~	65	~
KTV9-40H-2.5A	450	65	~	65	~	65	~	65	~
KTV9-40H-4.0A	450	65	~	65	~	65	~	65	~
KTV9-40H-6.3A	450	65	~	65	~	65	~	65	~
KTV9-40H-10A	450	65	~	65	~	65	~	65	~
KTV9-40H-16A	450	65	~	65	~	65	~	65	~
KTV9-40H-20A	450	65	~	65	~	65	~	65	~
KTV9-40H-25A	450	50	~	50	~	50	~	50	~
KTV9-40H-29A	450	50	~	50	~	50	~	50	~
KTV9-40H-32A	450	50	~	30	~	30	~	30	~
KTV9-40H-36A ❷	450	30	~	30	~	30	~	30	~
KTV9-40H-40A ❷	450	30	~	30	~	30	~	30	~

❶ For full voltage (delta) ratings above 277V or 347V, follow the NEC or CEC rules for group motor applications.
❷ Suitable for continuous operation at 90% current rating at 480V only if used in a minimum enclosure size of 250 x 175 x 150 mm (10 x 7 x 6 in).

Accessories for KT9

Accessory	Description	Operator Position ❶ OFF	ON	Tripped	Term. No.	Type	Connection Diagram and Terminal Markings ❷	For Use With	Catalog Number
	Front-Mounted Auxiliary Contact • 1-pole or 2-pole • No additional space required • Only one per device. • KT9-PE1...250V max. • KT7-PE1...300V max.	O	X	O	13-14	1 NO	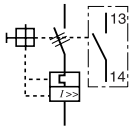	KT_9-32S KT_9-40H KTU9	**KT9-PE1-10**
								KT_7-45H	**KT7-PE1-10**
		X	O	X	11-12	1 NC	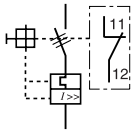	KT_7-45H	**KT7-PE1-01**
		O	X	O	13-14	1 NO	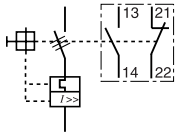	KT_9-32S KT_9-40H KTU9	**KT9-PE1-11**
		X	O	X	21-22	1 NC			
		O	X	O	13-14	1 NO		KT_7-45H	**KT7-PE1-11**
		X	O	X	21-22	1 NC			
		O	X	O	13-14	1 NO	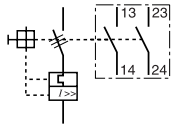	KT_9-32S KT_9-40H KTU9	**KT9-PE1-20**
		O	X	O	23-24	1 NO			
		O	X	O	13-14	1 NO		KT_7-45H	**KT7-PE1-20**
		O	X	O	23-24	1 NO			
		X	O	X	11-12	1 NC	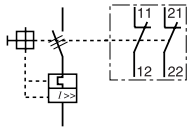	KT_7-45H	**KT7-PE1-02**
		X	O	X	21-22	1 NC			
	Right Side-Mounted Auxiliary Contact • 2-pole • Adds 9 mm to the width of the device. • 600V max. • One per device. • Not suitable for UL489 applications	O	X	O	33-34	1 NO	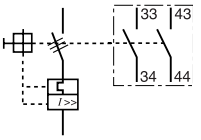	KT_9-32S KT_9-40H KTU9	**KT9-PA1-20**
		O	X	O	43-44	1 NO			
		O	X	O	33-34	1 NO		KT_7-45H	**KT7-PA1-20**
		O	X	O	43-44	1 NO			
		X	O	X	31-32	1 NC	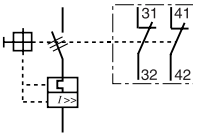	KT_9-32S KT_9-40H KTU9	**KT9-PA1-02**
		X	O	X	41-42	1 NC			
		X	O	X	31-32	1 NC		KT_7-45H	**KT7-PA1-02**
		X	O	X	41-42	1 NC			
		O	X	O	33-34	1 NO	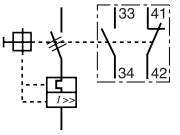	KT_9-32S KT_9-40H KTU9	**KT9-PA1-11**
		X	O	X	41-42	1 NC			
		O	X	O	33-34	1 NO		KT_7-45H	**KT7-PA1-11**
		X	O	X	41-42	1 NC			

❶ X=Contact Closed
O=Contact Open

❷
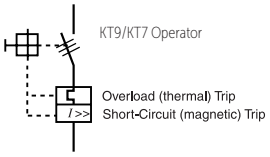

Accessories for KT9

Accessory	Description	Operator Position ❶ OFF	Operator Position ❶ ON	Operator Position ❶ Tripped	Term No.	Type	Connection Diagram and Terminal Markings ❷	For Use With	Catalog Number
	Front-Mounted Trip Contact • 2-pole • Indicates tripping of device • No additional space required • KT9-PEF1...250V max. • KT7-PEF1...300V max	O	X	O	13-14	NO Aux	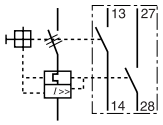	KT_9-32S KT_9-40H KTU9	**KT9-PEF1-S10N10**
		O	O	X	27-28	NO Trip (Short-Circuit & Overload)			
		O	X	O	13-14	NO Aux		KT_7-45H	**KT7-PEF1-S10-N10**
		O	O	X	27-28	NO Trip (Short-Circuit & Overload)			
		X	O	X	11-12	NC Aux	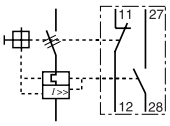	KT_9-32S KT_9-40H KTU9	**KT9-PEF1-S10N01**
		O	O	X	27-28	NO Trip (Short-Circuit & Overload)			
		X	O	X	11-12	NC Aux		KT_7-45H	**KT7-PEF1-S10-N01**
		O	O	X	27-28	NO Trip (Short-Circuit & Overload)			
		O	X	O	13-14	NO Aux	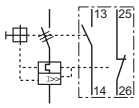	KT_9-32S KT_9-40H KTU9	**KT9-PEF1-S01N10**
		X	X	O	25-26	NC Trip (Short-Circuit & Overload)			
		O	O	X	17-18	NO Trip (Short-Circuit & Overload)	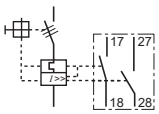		**KT9-PEF1-S10M10**
		O	O	X	27-28	NO Trip (Short-Circuit)			
	Right Side-Mounted Trip Contact • 2-pole • Indicates tripping of motor protector • Adds 9 mm to the width of the device • 600V max. • Only one per device • A right-side mounted auxiliary contactor may be tandem on top of this trip contact.	O	O	X	57-58	NO Trip (Short-Circuit & Overload)	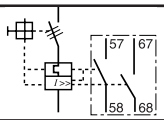	KT_7-45H	**KT7-PAF1-S10-M10**
		O	O	X	67-68	NO Trip (Short-Circuit)			
		O	O	X	57-58	NO Trip (Short-Circuit & Overload)	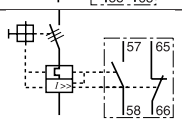	KT_7-45H	**KT7-PAF1-S10-M01**
		X	X	O	65-66	NC Trip (Short-Circuit)			
		X	X	O	55-56	NC Trip (Short-Circuit & Overload)	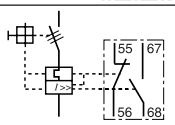	KT_7-45H	**KT7-PAF1-S01/M10**
		O	O	X	67-68	NO Trip (Short-Circuit)			
		X	X	O	55-56	NC Trip (Short-Circuit & Overload)	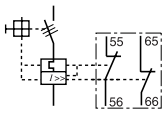	KT_7-45H	**KT7-PAF1-S01-M01**
		X	X	O	65-66	NC Trip (Short-Circuit)			
		O	O	X	77-78	NO Trip (Short-Circuit)	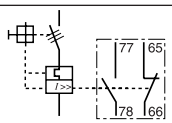	KT_7-45H	**KT7-PAF1-M11**
		X	X	O	65-66	NC Trip (Short-Circuit)			

❶ X=Contact Closed
O=Contact Open

❷

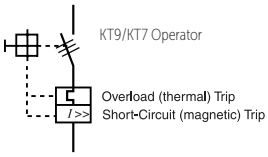

Accessories for KT9

Accessory	Description	For Use With	AC Coil Voltage 50 Hz	AC Coil Voltage 60 Hz	Catalog Number Shunt Trip	Catalog Number Undervoltage
	Undervoltage Trip • Left-side mounted • Adds 18mm to the width of the device • Automatically trips MPCD/MCP when voltage falls below 35...70% **Shunt trip** • Left-side mounted • Adds 18mm to width of device. • Provides remote tripping of the MPCB/MCF • Maximum on time for DC operated devices: 5 sec.	KTA9 KTB9 KTC9 KTV9 KTU9 ❸	24V	24...28V	**KT9-AA-24V**	**KT9-UA-24V**
			110V	120V	**KT9-AA-120V**	**KT9-UA-120V**
			220...230V	~	**KT9-AA-230V**	**KT9-UA-230V**
			~	240...260V	**KT9-AA-260V**	**KT9-UA-260V**
			~	277V	**KT9-AA-277V**	**~**
			380...400V	~	**KT9-AA-400V**	**KT9-UA-400V**
			415V	480V	**KT9-AA-480V**	**KT9-UA-480V**
			DC Coil Voltage		**Shunt Trip**	**Undervoltage**
			~	24VDC	**KT9-AA-24D**	**~**
	Undervoltage Trip • Left-side mounted • Adds 18 mm to the width of the KT7 device • Automatically trips motor protector when voltage falls below 35...70% **Shunt Trip** • Left-side mounted • Adds 18 mm to the width of the KT7 device • Trips motor protector when voltage is applied remotely	KTA7 KTB7 KTC7	**AC Coil Voltage**		**Shunt Trip**	**Undervoltage**
			12V	14V	**KT7-AA-14V**	**KT7-UA-14V**
			21V	24V	**KT7-AA-24V**	**KT7-UA-24V**
			24V	28V	**KT7-AA-28V**	**KT7-UA-28V**
			42V	48V	**KT7-AA-48V**	**KT7-UA-48V**
			110V	120V	**KT7-AA-120V**	**KT7-UA-120V**
			110V	127V	**KT7-AA-127V**	**KT7-UA-127V**
			220...230V	~	**KT7-AA-230V**	**KT7-UA-230V**
			~	240...260V	**KT7-AA-240V**	**KT7-UA-240V**
			240V	277V	**KT7-AA-277V**	**KT7-UA-277V**
			380V	460V	**KT7-AA-460V**	**KT7-UA-460V**
			415V	480V	**KT7-AA-480V**	**KT7-UA-480V**
			525V	600V	**KT7-AA-600V**	**KT7-UA-600V**
			DC Coil Voltage		**Shunt Trip**	**Undervoltage**
			9V DC		**KT7-AA-9D**	**KT7-UA-9D**
			12V DC		**KT7-AA-12D**	**KT7-UA-12D**
			24V DC		**KT7-AA-24D**	**KT7-UA-24D**
			36V DC		**KT7-AA-36D**	**KT7-UA-36D**
			48V DC		**KT7-AA-48D**	**KT7-UA-48D**
			60V DC		**KT7-AA-60D**	**KT7-UA-60D**
			64V DC		**KT7-AA-64D**	**KT7-UA-64D**
			72V DC		**KT7-AA-72D**	**KT7-UA-72D**
			80V DC		**KT7-AA-80D**	**KT7-UA-80D**

Undervoltage Trip Connection Diagram

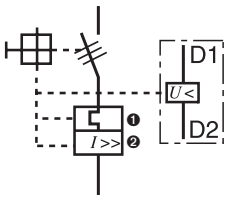

Shunt Trip Connection Diagram

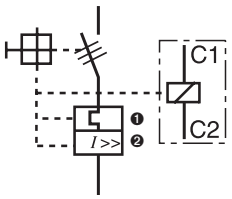

❶ For Overload (thermal) Trip of KT9/KT7.
❷ For Short-Circuit (magnetic) Trip of KT9/KT7.
❸ (UL 489 application up to 30 A)

Classic Handle Assembly, Type 1/4/4X/12

Accessory	Description	Color	Legend	For use with...	Frame size (Length)	Catalog Number
	Door Coupling Handle ❶ • For 3 padlocks 4...8 mm (5/16 in.) in diameter • IPX4 Protection/Type 1, 3R Interlock override capability • Can be modified for locking in ON position • Ships with coupling — order extension shaft and legend plate separately	Gray/ Black	O - I OFF -ON Trip	KT_9-32S, KT_9-40H, KTU9 ❶	65 x 65mm	**KT9-HTN**
				KT_7-45H ❶		**KT7-HTN**
		Red/ Yellow	O - I OFF -ON Trip	KT_9-32S, KT_9-40H, KTU9 ❶	65 x 65mm	**KT9-HTRY**
				KT_7-45H ❶		**KT7-HTRY**
	Extension Shaft (Short Length) ❶ • Cut to required length for mounting depth (front of DIN Rail to front of enclosure door) KTA9-32S: 136 mm (5.35 in) KT_9-40H: 143 mm (5.63 in) • For Cat. Nos. KT9-HTN and KT9-HTRY handles			KTA9-32S KT_9-40H KT_7-45H		**KT9-HTS**
	Extension Shaft (Standard Length) • Cut to required length for mounting depth (front of DIN Rail to front of enclosure door) KTA9-32S: 136...358 mm (5.35...14.1 in) KT_9-40H: 143...364 mm (5.63...14.33 in) • For Cat. Nos. KT9-HTN and KT9-HTRY handles					**KT9-HT**
	Extension Shaft (Extended Length) • Cut to required length for mounting depth (front of DIN Rail to front of enclosure door) KTA9-32S: 136...507 mm (5.35...19.96 in) KT_9-40H: 143...513 mm (5.63...20.0 in) • For Cat. Nos. KT9-HTN and KT9-HTRY handles					**KT9-HTL**

Contemporary Handle Assembly, Type 3R/3/4/4X

Accessory	Description	Color	Legend	For use with...	Frame Size (Length)	Catalog Number
	Contemporary Door Coupling Handle • Screw Fixing • Type 3R, 3, 12, 4, 4X, IP66 • Field configurable for defeatable or non-defeatable • Ships with coupling — order extension shaft and legend plate separately • Requires 30mm hole for mounting • For up to 2 padlocks	Black/ Black	O - I OFF -ON Trip	KT_9-32S, KT_9-40H, KTU9	48.7 x 47mm	**KT9-SB**
				KT_7-45H		**KT7-SB**
		Red/ Yellow	O - I OFF - ON Trip	KT_9-32S, KT_9-40H, KTU9	48.7 x 47mm	**KT9-SY**
				KT_7-45H		**KT7-SY**
	Extension Shaft • Cut to required length for mounting depth (front of DIN Rail to front of enclosure door) • See Technical Section for mounting depth information			KT9-SB KT9-SY	305mm (12")	**KT9-S1**
				KT7-SB KT7-SY		**KT7-S1**
				KT9-SB KT9-SY	533mm (21")	**KT9-S2**
				KT7-SB KT7-SY		**KT7-S2**

Handle Accessories

Accessory	Description	For use with...	Catalog Number
	Coupler • Coupler for extension shaft • Included with KT9-HTN/HTRY and KT9-SB/SY handles	KTA9-32S, KT_9-40H KTU9-40H	**KT9-DNC**
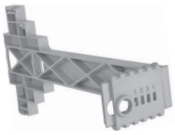	**Extension Shaft Support ❷** • Provides consistent alignment of the shafts with handle or door coupling • Recommended for shaft lengths >200mm (7.8 in) • 9mm in width and snaps on right side of devices	KT_9-32S, KT_9-40H, KTU9	**KT9-SHS**
		KT_7-45H	**KT7-SHS**
	Legend Plate • Marking: "Haupschalter" and "Main Switch" (Black/Gray) • Marking: "Not-Aus" and "Emergency Off" (Black/Yellow)	KT9-HT_	**KT9-HTFCN**
		KT7-HT_	**KT7-HTFCN**
		KT9-HT_	**KT9-HTFCRY**
		KT7-HT_	**KT7-HTFCRY**

❶ See Dimensions and Technical data in this section for design compatibility.
❷ See page F1:31 for assembly example and dimensions.

Accessories for KT9

Accessory	Description	Color	For Use With	Catalog Number
	Lockable Twist Knob • For 1 padlock 4...6 mm (3/16 in.) diameter shackle • Can be locked in OFF position	Black	KT_9-32S, KT_9-40H, KTU9	**KT9-KN**
			KT_7-45H	**KT7-KN1**
		Red/Yellow	KT_9-32S, KT_9-40H, KTU9	**KT9-KRY**
			KT_7-45H	**KT7-KRY1**
	Locking Tag • Padlock attachment to the lockable handles • Up to three padlocks 4...8 mm (5/16 in.) dia. shackle	Red	KT9-KN KT9-KRY1	**KT9-M3**
			KT7-KN1 KT7-KRY1	**KT7-DS**
	Terminal Adapter for Type E Applications ❶ • Required for self-protected combination motor controller (Type E) application of KT_9-32S, KT_9-40H and KT_7-45H • Not for use with bus bars		KT_9-32S, KT_9-40H	**KT9-40-TE**
			KT_7-45H	**KT7-45-TE**
	Anti-Tamper Shield • Provides protection against inadvertent adjusment of the current setting • Sold only in packages of 10. Order 10 pieces to receive 1 pkg. of 10		KT_9-32S, KT_9-40H	**KT9-CA**
			KT_7-45H	**KT7-25-CA**
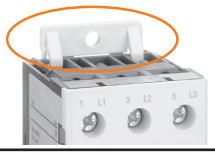	**Screw Adaptor** • For screw fixing of motor protection circuit breaker • Sold only in packages of 10. Order 10 pieces to receive 1 pkg. of 10		KT_9-32S, KT_9-40H, KTU9	**KT9-N45**
			KT_7-45H	**KT7-45-AS**

Marking Systems

Component	Description	Pkg. Qty.	Catalog Number
	Label Sheet - • 1 sheet with 105 self-adhesive paper labels each, 6 x17mm	1	**CA7-FMS**

❶ Terminal Adaptors are supplied as standard on enclosed KT9 and CX7 starters, as well as, CLE- assembled products, assuring they can be used in Type E applications. Alternatively, compact busbar supply block KT9-_-A2E or -A3E meet Type E requirements for terminal spacing.

Connecting Modules *(for connecting KT_9/KT_7 to CA8, CA7 AC coil, or CA7 Electronic DC coil contactors)* ❷

Module	Type	Description	For Connecting	Catalog Number ❶
	ECO Connection Module 12A (IEC) , 11A (UL)	• For DOL and reversing starters • Eco-starters mount on single DIN Rail (KT_9 on DIN Rail) • Electrical and mechanical interconnection of KT_9 and CA8 contractors	KT_9-32S to CA8	**KT9-32S-PEK12**
	ECO Connection Module 25A (IEC) , 22A (UL)	• Eco-starters mount on single DIN Rail (KT_9 on DIN Rail) • Electrical and mechanical interconnection of KT_9 MPCB and CA7 (with AC coils or 24V DC electronic coils) contactors	KT_9-32S to CA7-9...23	**KT9-32S-PEC23**
			KT_9-40H to CA7-9...23	**KT9-40H-PEC23**
	ECO Connection Module 38A (IEC) , 34A (UL)	• Eco-starters mount on single DIN Rail (KT_9 on DIN Rail) • Electrical and mechanical interconnection of KT_9 MPCB and CA9 (with AC coils or 24V DC electronic coils) contactors	KT_9 -40H to CA7-30...37	**KT9-40H-PEC37 ❸**
	ECO Connection Module KT9-...-PNC23 **25A (IEC), 24A (UL)** KT9-...-PNC37 **38A (IEC), 34A (UL)**	• Contactor and MPCB MUST BE mounted separately on (2) DIN Rails Electrical interconnection of KT_9 and CA7 (with AC coils)	KT_9-32S to CA7-9...23	**KT9-32S-PNC23**
			KT_9-40H to CA7-9...23	**KT9-40H-PNC23**
			KT_9-40H to CA7-30...37	**KT9-40H-PNC37 ❸**
	Connecting Modules — 25 and 45 A	• Contactor and MPCB MUST BE mounted separately on (2) DIN Rails Electrical • Interconnection of KT_7-45H and CA7 (with AC coils)	KT_7-45H to CA7-30...37	**KT7-45H-PNC37**
			KT_7-45H to CA7-43	**KT7-45H-PNC43**

Coil Modules

	Coil Extension Modules	• Provides access to coil terminals on 3-component starters	CA7-9...23	**KT9-32S-PSC23**
			CA7-30...55	**KT9-80H-PSC43**
			CA7-30...55	**KT7-45H-PSC43**

Type W Mounting Modules

Module	Description	Width (mm)	Catalog Number
	Short Mounting Module - Requires Connecting Module from tables above • Provides support for KT9 + CA7 or CA8 • Top rail is specifically designed for KT9 • Bottom rail is movable for easy assembly and disassembly • Complete unit mounts to two 35mm DIN-rails or one 70mm DIN-rail or screw mounts • 228 mm long	45	**W-32489**
		54	**W-32490**
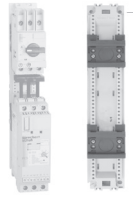	**Long Mounting Module -** See Section D for Connecting Modules • Provides support for KT9 + PCS Softstarter, CA7 + PCS Softstarter or KTB9 + CA7+CEP7 • Top rail is specifically designed for KT9 • Bottom rail is movable for easy assembly and disassembly • Complete unit mounts to two 35mm DIN-rails or one 70mm DIN-rail or screw mounts • 283 mm long	45	**W-32496**
		54	**W-32497**

❶ cURus Approved (File # E33916).
❷ Not for use with KTU9 Circuit Breakers
❸ Included in the purchase is a spacer to cover the unused lug area for a non-reversing application allowing for finger safety compliance.

Compact Busbar System for KT_9 Motor Controllers ❶

Accessory	Description	For Use With	Catalog Number
	Compact Busbar — 45 mm Spacing (Rated 64 A) • For use with front-mounted auxiliary contact on KT_9 Motor Controllers Connects 2 Motor Controllers Connects 3 Motor Controllers Connects 4 Motor Controllers Connects 5 Motor Controllers	KTA9-32S, KT_9-40H	**KT9-40-DB-45-2** **KT9-40-DB-45-3** **KT9-40-DB-45-4** **KT9-40-DB-45-5**
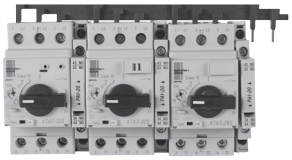	**Compact Busbar — 54 mm Spacing (Rated 64 A)** • For use with side-mounted auxiliary contact on KT_9 Motor Controllers Connects 2 Motor Controllers Connects 3 Motor Controllers Connects 4 Motor Controllers Connects 5 Motor Controllers	KTA9-32S, KT_9-40H	**KT9-40-DB-54-2** **KT9-40-DB-54-3** **KT9-40-DB-54-4** **KT9-40-DB-54-5**
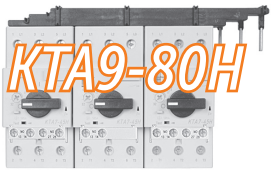	**Compact Busbar — 54mm Spacing (Rated 115 A)** • For use with front-mounted auxiliary contact on KT_9 Motor Controllers Connects 2 Motor Controllers Connects 3 Motor Controllers	KT_9-80H	**KT9-80-DB-55-2** **KT9-80-DB-55-3**
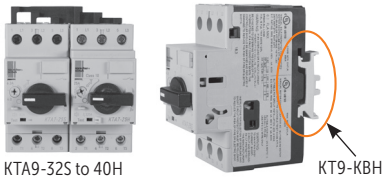	**Top Hat Rail Adapter — 10 mm** • Adjust the depth of the KTA9-32S to the KT_9-40H • Allows the use of compact busbars across both frame sizes • Must be ordered in multiples of 10 • Sold only in packages of 10. Order 10 pieces to receive 1 pkg. of 10	KTA9-32S	**KT9-KBH**
 KT9-40-A2E	**Feeder Block for Compact Busbar** • Supply of compact busbars • Increases terminal capacity	KTA9-32S KT_9-40H❷	**KT9-40-A2E**
		KT_9-80H	**KT9-80-A2E**
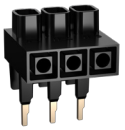 **KT9-40-A3E**	**Feeder Terminal for Compact Busbar** • For supply of compact busbars • Top feed — overlaps compact busbar • Meets UL Type E spacing requirements	KTA9-32S, KT_9-40H	**KT9-40-A3E**
		KT_9-80H	**KT9-80-A3E**
	Terminal Cover • For covering of unused compact bus bar terminals IP2X finger protection • Must be ordered in multiples of 10 • Sold only in packages of 10. Order 10 pieces to receive 1 pkg. of 10	KT9-40-DB	**KT9-40-DBA**
		KT9-80-DB	**KT9-80-DBA**

❶ UL Approved (File #E33916); CSA Approved (File #13908).
❷ Using KT9-40-A2E with KT_9-40H requires KT9-KBH rail adapter.

General Data

Attribute			KT9-32S	KT9-40H	KT7-45H
Standards compliance	IEC		IEC/EN 60947–2, IEC/EN 60947-4-1		
	cULus ❶		UL 60947-4-1, CSA C22.2, No. 60947-4-1		
Certifications	Regional ❶		CCC, EAC, CE, IEC, cULus Listed		cULus Listed, CCC, EAC, CE
Rated Insulation Voltage U_i	IEC	[V]	690		
	UL/CSA	[V]	600		
Rated Impulse Withstand Voltage U_{imp}	Pollution degree		3		
	Main circuits U_{imp} /Overvoltage Category		6 kV/III, 8 kV (Disconnect)		
	Auxiliary circuits U_{imp} /Overvoltage Category		6 kV/III		
Rated Frequency	[Hz]		45-65		
Utilization Category	IEC 60947-2 (Circuit breaker)		A		
	IEC 60947-4-1 (Motor starter)		AC-3		
Life Span	Mechanical	[operations]	100,000		30,000
	Electrical (I_e max.)	[operations]	100,000		30,000
Switching Frequency	[operations/hours]		max. 25		
Ambient Temperature	Storage	[°C (°F)]	-40...+85°C (-40-185°F)		
	Operation	[°C (°F)]	-25...+70°C (-13-158°F)		
Climatic resistance	Operating Humidity/Moisture heat (60068-2-3)		5...95% Non-condensing		
Site Altitude	[m]		to 2000 N.N. (6561 ft)		
Protection Class			IP2X from all directions		
Resistance to Shock, Transport (60068-2-27)	ON		15 G/11 ms		
	OFF		30 G/11 ms		
Resistance to Vibration, Operation (60068-2-6)			5 G		
Rated Thermal Current I_{th}	up to 40 °C (104 °F) ambient temperature	[A]	0.1...32	0.63...40	6.3...45
	up to 60 °C (140 °F) ambient temperature	[A]	0.1...32	0.63...40	6.3...45
Rated Supply Current I_e		[A]	0.1...32	0.63...40	6.3...45
Dependence on Temperature	40 °C (104 °F)	[A]	no reduction		
	50 °C (122 °F)	[A]	no reduction		
	60 °C (140 °F)	[A]	no reduction		
	70 °C (158 °F)	[A]	15% current reduction of the upper rated current I_e		
Overload Protection Characteristics			IEC 60947-4-1 Motor protection (except Cat. Nos. KTB9-40H, KTB7-45H)		
Ambient Temperature Compensation		[°C (°F)]	-25...+60 (-13...+140)		
Phase-loss Protection			Differential release		
Trip class			10 (except Cat. Nos. KTB9-40H, KTB7-45H) fixed setting		
Magnetic Release			fixed setting		
Release current (±20%)	for KTA9, KTB9	[A]	14 x I_e max. ❷		13 x I_e max
	for KTA9, KTB9 36A, 40A	[A]	12 x I_e max. ❷		~
	for KTC9	[A]	18...22 x I_e max. ❸		
Total Power loss P_v	Circuit Breaker at rated load/ operating temp.	[W]	4...11	4...14	7...22
Main Disconnect Switch Application			Yes, with accessories		
Application Conditions	KT_9-40H...36A, -40A: Suitable for continuous operation at 90% current rating at 480V only if used in a minimum enclosure size of 250 x 175 x 150 mm (10 x 7 x 6 in).				
	For utilization outside North America, assemblies (of products) shall comply to the IEC 61439-1 requirements				
	KT9 manual starters are intended for use in closed areas without hazardous operating conditions such as dust or explosive or corrosive gases. Enclosures of appropriate manner need to be in place to protect devices in such environments.				

❶ cULus Listing in process.
❷ I_e max. = maximum values of setting ranges fixed magnetic setting for KTV9-40H; see ratings.
❸ I_e max. = maximum values of setting ranges; see ratings.

MPCB Connecting Characteristics

Connection	No. of conductors	KTA9-32S	KT_9-40H	KT_7-45H
Power Terminals				
Terminal Type Screwdriver		Screw Clamp up to 16 A, M4 Pozidriv No.2/Blade No.3	Screw Clamp greater than 16 A, M4 Pozidriv No.2/Blade No.3	Pozidrive No. 2/Blade No. 3
Solid or stranded	1 conductor	1...6 mm²	1.5...10 mm²	2.5...25 mm²
	2 conductor	1...2.5 mm² 2.5...6 mm²	1.5...4 mm² 4...10 mm²	2.5...25 mm²
Flexible with ferrule (end sleeve) 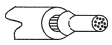	1 conductor	1...6 mm²	1.5...10 mm²	2.5...25 mm²
	2 conductor	1...2.5 mm² 2.5...4 mm²	1.5...4 mm² 4...10 mm²	2.5...25 mm²
Finely stranded	1 conductor	1.5...6 mm²	2.5...10 mm²	16...25 mm²
	2 conductor	1.5...4 mm² 2.5...6 mm²	2.5...6 mm² 4...10 mm²	16...25 mm²
Cross section per UL/CSA solid, stranded	1 conductor	No. 14...10 AWG	No. 14...8 AWG	No.14...8
	2 conductor	No. 14...10 AWG	No. 14...10 AWG No. 12...8 AWG	No.14...8
Stripping length		10 mm (0.39 in.)	10 mm (0.39 in.)	10 mm (0.39 in.)
Tightening torque	[Nm]/[lb-in.]	2...2.5 / 18...22	2...2.5/18...22	3...3.5 / 27...30

Approval Comparison

	KTA9-32S	KT_9-40H	KT_7-45H
Features and Approvals			
Max. Current I_e	32 A	32 A	45 A
Current Rating	0.1...32 A	0.63...40A	6.3...45 A
Short Circuit Protection	✓	✓	✓
Standard magnetic Trip	✓	✓	✓
High Magnetic Trip	✓	✓	✓
Magnetic Only Trip (MCP)	✓	✓	✓
Overload Protection	✓	✓	✓
Trip Class	✓	✓	✓
Application at output of VFD (multi-motor)		✓ (KTV9)	✓
Standards Compliance:			
CSA22.2, No. 14	✓	✓	✓
UL508 (Group Installation)	✓(see ratings)	✓(see ratings)	✓(see ratings)
UL508 Manual, Self-protected (Type E)	✓(see ratings)	✓(see ratings)	✓(see ratings)
UL508 (Overload Protection)	✓	✓	✓
IEC60947-1,-2	✓	✓	✓
IEC60947-4-1	✓	✓	✓
CE	✓	✓	✓
ATEX (IEC60079-14)	✓ (up to 25 A)	✓ (up to 25 A except KTV9)	✓
CCC	✓ (up to 25 A)	✓ (up to 25 A except KTV9)	✓
Accessories			
External Rotary Operator	✓	✓	✓
Auxiliary Contacts	✓	✓	✓
Trip Indicator Contacts	✓	✓	✓

Auxiliary Contact Specifications – for KTA9-32S... and KT_9-40H devices

Attribute			Front-mounted Auxiliary Contacts Cat. Nos. KT9-PE1, -PEF1/ -PEF1-S10M10	Right Side-mounted Auxiliary Contacts Cat. No. KT9-PA1
Rated Thermal Current I_{th}	at 40ºC (104ºF) ambient temperature	[A]	5	10
	at 60ºC (140ºF) ambient temperature	[A]	4	6
Back-up Fuses gG, gL		[A]	10	10
General Use current		[A]	5	10
Rated insulation voltage U_i	IEC	[V]	250	690
	UL/CSA	[V]	240	600
Contact rating code designation (UL/CSA)		AC	B300	A600
		DC	R300	Q600
Rated Supply Current I_e	AC-15	24V [A]	4	6
		120V [A]	3	5
		240V [A]	1.5	3
		415V [A]	-	2
		690V [A]	-	1
	DC-13	24V [A]	1.2	2
		125V [A]	0.22	0.55
		250V [A]	0.11	0.27
		400V [A]	-	0.15
		500V [A]	-	0.13
Type of Terminals				
Recommended Screwdriver			Pozidrive No. 2/Blade No. 3	Pozidrive No. 2/Blade No. 3
Flexible with insulated ferrule		1 or 2 conductors	0.5...1.5 mm2/No. 18...14 AWG	0.5...2.5 mm2/No. 18...14 AWG
Flexible		1 or 2 conductors	0.5...1.5 mm2/No. 18...14 AWG	0.75...2.5 mm2/No. 18...14 AWG
Stranded per UL/CSA		1 or 2 conductors	0.5...1.5 mm2/No. 18...14 AWG	0.75...2.5 mm2/No. 18...14 AWG
Solid		1 or 2 conductors	0.5...1.5 mm2/No. 18...14 AWG	0.5...2.5 mm2/No. 18...14 AWG
Conductor steps			Max 2 conductor steps allowed	Max 2 conductor steps allowed
Tightening torque			1...1.2 N•m/8.9...10.6 lb•in	1...1.2 N•m/8.9...10.6 lb•in1...1.2

Auxiliary Contact Specifications – for KT_7-45H... devices

Attribute			Front-mounted Auxiliary Contacts Cat. Nos. 140M-C-AFA..., 140M-C-AFAR...	Right Side-mounted Auxiliary Contacts Cat. Nos. 140M-C-ASA..., 140M-C-ASAR...
Rated Thermal Current I_{th}	at 40ºC (104ºF) ambient temperature	[A]	5	10
	at 60ºC (140ºF) ambient temperature	[A]	4	6
Back-up Fuses gG, gL		[A]	10	10
Contact rating code designation (UL/CSA)		AC	B300	A600
		DC	R300	Q600
Rated Supply Current I_e	AC-15	24V [A]	4	6
		120V [A]	3	5
		240V [A]	1.5	3
		415V [A]	-	2
		690V [A]	-	0.7
	DC-13	24V [A]	2	2
		120V [A]	0.5	0.5
		240V [A]	0.25	0.25
		415V [A]	-	0.15
Type of Terminals				
Recommended Screwdriver			Pozidriv No. 2/Blade No.3	Pozidriv No. 2/Blade No.3
Flexible with insulated ferrule		1 conductor	0.5...1.5 mm²	0.5...2.5 mm²
		2 conductors	0.75...1.5 mm²	0.75...2.5 mm²
Stranded per UL/CSA		1 or 2 conductors	0.75...1.5 mm²/No. 18...14 AWG	0.75...2.5 mm²/No. 18...14 AWG
Solid		1 or 2 conductors	0.75...1.5 mm²/No. 18...14 AWG	0.75...2.5 mm²/No. 18...14 AWG
Tightening torque			1...1.2 N•m/8.9...10.6 lb•in	1...1.2 N•m/8.9...10.6 lb•in1...1.2

Undervoltage and Shunt Trip Specifications—For KTA9-32S... and KT_9-40H... devices

				Undervoltage Trip for Left-Side Mounting Cat. Number KT9-UA-*	Shunt Trip for Left-Side Mounting Cat. Number KT9-AA-*
Actuating Voltage			Pull-in	0.85...1.1 x U_s	0.7...1.1 x U_s
			Drop-out	0.7...0.35 x U_s	0.7...1.1 x U_s
Rated AC Control Voltage	KT9-UA-24V		50 Hz	24	-
			60 Hz	28	-
	KT9-UA-120V		50 Hz	110	-
			60 Hz	120	-
	KT9-UA-230V		50 Hz	220...230	-
			60 Hz	-	-
	KT9-UA-260V		50 Hz	-	-
			60 Hz	240...260	-
	KT9-UA-400V		50 Hz	380...400	-
			60 Hz	440...460	-
	KT9-UA-480V		50 Hz	415	-
			60 Hz	480	-
	KT9-AA-24V		50 Hz	-	24
			60 Hz	-	24...28
	KT9-AA-120V		50 Hz	-	110
			60 Hz	-	120
	KT9-AA-230V		50 Hz	-	220...230
			60 Hz	-	-
	KT9-AA-260V		50 Hz	-	-
			60 Hz	-	240...260
	KT9-AA-277V		50 Hz	-	240
			60 Hz	-	277
	KT9-AA-400V		50 Hz	-	380...400
			60 Hz	-	440...460
	KT9-AA-480V		50 Hz	-	415
			60 Hz	-	480
	On-time			Continuous duty	Continuous duty
	Coil consumption			8.5/8	8.5/8
				4/2	4/2
Rated DC Control Voltage	KT9-AA-24D			-	24
	On-time			-	Max 5 s
	Coil consumption		Pick-up	-	50
Type of Terminals					
Recommended screwdriver				Pozidrive No. 2/Blade No. 3	Pozidrive No. 2/Blade No. 3
Flexible with insulated ferrule		1 or 2 conductor		0.5...2.5 mm²/ No. 18...14 AWG	0.5...2.5 mm²/ No. 18...14 AWG
Flexible		1 or 2 conductor		0.75...2.5 mm²/ No. 18...14 AWG	0.75...2.5 mm²/ No. 18...14 AWG
Stranded per UL/CSA		1 or 2 conductor		0.75...2.5 mm²/ No. 18...14 AWG	0.75...2.5 mm²/ No. 18...14 AWG
Solid		1 or 2 conductor		0.5...2.5 mm²/ No. 18...14 AWG	0.5...2.5 mm²/ No. 18...14 AWG
Conductor steps				Max 2 conductor steps allowed	Max 2 conductor steps allowed
Tightening torque				1...1.2 N•m/8.9...10.6 lb•in	1...1.2 N•m/8.9...10.6 lb•in1...1.2

Undervoltage and Shunt Trip Specifications– For KT_7-45H... devices

Attribute				Undervoltage Trip for Left-Side Mounting Cat. Number KT7-UA-*	Shunt Trip for Left-Side Mounting Cat. Number KT7-AA-*
Actuating Voltage	Pick-up		[V]	0.85...1.1 x U_s	0.7...1.1 x U_s
	Drop-out		[V]	0.7...0.35 x U_s	0.7...1.1 x U_s
Rated AC Control Voltage	Min	50 Hz	[V AC]	21	21
		60 Hz	[V AC]	24	24
	Max	60 Hz	[V AC]	600	600
	On-time			Continuous duty	Continuous duty
	Coil consumption	Pick-up	[VA/W]	8.5/8	8.5/8
		Hold-in	[VA/W]	4/2	4/2
Type of Terminals					
Recommended Screwdriver				Pozidrive No. 2/Blade No. 3	Pozidrive No. 2/Blade No. 3
	Flexible with insulated ferrule	1 conductor		0.5...2.5 mm²	0.5...2.5 mm²
		2 conductors		0.75...2.5 mm²	0.75...2.5 mm²
	Stranded per UL/CSA	1 or 2 conductors		0.75...2.5 mm²/No. 18...14 AWG	0.75...2.5 mm²/No. 18...14 AWG
	Solid	1 or 2 conductors		0.75...2.5 mm²/No. 18...14 AWG	0.75...2.5 mm²/No. 18...14 AWG
Conductor steps				1.2...1.5 N•m/10.6...13.3 lb•in	1.2...1.5 N•m/10.6...13.3 lb•in

IEC Application Ratings, Interrupting Rating/Breaking Capacity

Catalog Number	Breaking Capacity, IEC 60947-2														
	230/240V AC			400/415V AC			440/460V AC			500/525V AC			690V AC		
	I_{cu} [kA]	I_{cs} [kA]	Back-up Fuse Rating❶ [A]	I_{cu} [kA]	I_{cs} [kA]	Back-up Fuse Rating❶ [A]	I_{cu} [kA]	I_{cs} [kA]	Back-up Fuse Rating❶ [A]	I_{cu} [kA]	I_{cs} [kA]	Back-up Fuse Rating❶ [A]	I_{cu} [kA]	I_{cs} [kA]	Back-up Fuse Rating❶ [A]
C-Frame, Adjustable Thermal/Fixed Magnetic (14 x I_n)															
KTA9-32S-0.16A	100	100		100	100		100	100		100	100		100	100	
KTA9-32S-0.25A	100	100		100	100		100	100		100	100		100	100	
KTA9-32S-0.40A	100	100		100	100		100	100		100	100		100	100	❷
KTA9-32S-0.63A	100	100		100	100		100	100		100	100		100	100	
KTA9-32S-1.0A	100	100		100	100	❷	100	100	❷	100	100	❷	100	100	
KTA9-32S-1.6A	100	100	❷	100	100		100	100		100	100		4	4	16
KTA9-32S-2.5A	100	100		100	100		100	100		100	100		4	4	20
KTA9-32S-4.0A	100	100		100	100		100	100		100	100		4	4	35
KTA9-32S-6.3A	100	100		100	100		100	100		100	100		3	3	50
KTA9-32S-10A	100	100		100	50	80	50	50	80	50	50	63	3	3	50
KTA9-32S-16A	100	100		65	50	80	10	6	80	10	6	80	3	3	63
KTA9-32S-20A	65	50	100	50	15	100	6	6	80	6	6	80	3	2	63
KTA9-32S-25A	65	50	100	15	15	100	6	4	80	6	4	80	3	2	63
KTA9-32S-29A	50	25	125	15	10	125	6	4	100	6	4	100	3	2	80
KTA9-32S-32A	50	25	125	15	10	125	6	4	100	6	4	100	3	2	80

❶ Back-up fuses are type gG, a**M**.
❷ No Back-up fuse required if $I_{cc}<I_{cs}$.

IEC Application Ratings, Interrupting Rating/Breaking Capacity *Continued*

Catalog Number	Breaking Capacity, IEC 60947-2														
	230/240V AC			400/415V AC			440/460V AC			500/525V AC			690V AC		
	I_{cu} [kA]	I_{cs} [kA]	Back-up Fuse Rating❶ [A]	I_{cu} [kA]	I_{cs} [kA]	Back-up Fuse Rating❶ [A]	I_{cu} [kA]	I_{cs} [kA]	Back-up Fuse Rating❶ [A]	I_{cu} [kA]	I_{cs} [kA]	Back-up Fuse Rating❶ [A]	I_{cu} [kA]	I_{cs} [kA]	Back-up Fuse Rating❶ [A]
D-Frame, Adjustable Thermal/Fixed Magnetic (14 x I_n)															
KTA9-40H-0.63A	100	100	❷	100	100		100	100		100	100		100	100	
KTA9-40H-1.0A	100	100		100	100		100	100		100	100		100	100	❷
KTA9-40H-1.6A	100	100		100	100		100	100		100	100		100	100	
KTA9-40H-2.5A	100	100		100	100	❷	100	100	❷	100	100	❷	6	4	20
KTA9-40H-4.0A	100	100		100	100		100	100		100	100		6	4	35
KTA9-40H-6.3A	100	100		100	100		100	100		100	100		6	4	50
KTA9-40H-10A	100	100		100	100		100	100		100	100		6	3	50
KTA9-40H-16A	100	100		100	50	80	50	25	80	50	25	80	4	3	63
KTA9-40H-20A	100	100		100	25	100	50	25	100	50	25	80	4	3	63
KTA9-40H-25A	100	100		65	25	100	35	20	100	35	20	80	4	3	63
KTA9-40H-29A	65	50	125	50	25	125	25	15	125	25	15	100	4	3	80
KTA9-40H-32A	65	50	125	50	25	125	25	15	125	25	15	100	4	3	80
KTA9-40H-36A❸	50	35	125	50	25	125	12	6	125	12	6	100	3	2	100
KTA9-40H-40A❸	50	35	125	50	25	125	12	6	125	12	6	100	3	2	100
D-Frame, Fixed Magnetic (application at output of VFD multi-motor)															
KTV9-40H-1.6A	100	100		100	100		100	100		100	100		-	-	
KTV9-40H-2.5A	100	100		100	100		100	100		100	100		-	-	
KTV9-40H-4.0A	100	100		100	100	❷	100	100	❷	100	100	❷	-	-	
KTV9-40H-6.3A	100	100	❷	100	100		100	100		100	100		-	-	
KTV9-40H-10A	100	100		100	100		100	100		100	100		-	-	
KTV9-40H-16A	100	100		100	50	80	50	25	80	50	25	80	-	-	
KTV9-40H-20A	100	100		100	25	100	50	25	100	50	25	80	-	-	❷
KTV9-40H-25A	100	100		60	25	100	35	20	100	35	20	80	-	-	
KTV9-40H-29A	65	50	125	50	25	125	25	15	125	25	15	80	-	-	
KTV9-40H-32A	65	50	125	50	25	125	25	15	125	25	15	80	-	-	
KTV9-40H-36A❸	50	35	125	50	25	125	12	6	125	12	6	80	-	-	
KTV9-40H-40A❸	50	35	125	50	25	125	12	6	125	12	6	80	-	-	
F-Frame, Adjustable Thermal/Fixed Magnetic (13 x I_n)															
KTA7-45H-10A	100	100		100	50	80	65	50	80	50	50	80	10	10	63
KTA7-45H-16A	100	100		100	50	100	65	50	100	50	50	100	10	10	80
KTA7-45H-20A	100	100	❷	100	50	100	65	50	100	50	50	100	10	10	80
KTA7-45H-25A	100	100		100	50	100	65	50	100	50	50	100	10	10	80
KTA7-45H-32A	100	100		65	50	125	65	50	125	50	50	125	10	6	100
KTA7-45H-45A	100	100		65	50	125	50	50	125	50	50	125	10	6	100

❶ Back-up fuses are type gG, a**M**.
❷ No Back-up fuse required if $I_{cc}<I_{cs}$.
❸ Suitable for continuous operation at 90% current rating at 480V only if used in a minimum enclosure size of 250 x 175 x 150 mm (10 x 7 x 6 in).

IEC Application Ratings, Interrupting Rating/Breaking Capacity *Continued*

Catalog Number	Breaking Capacity, IEC 60947-2														
	230/240V AC			400/415V AC			440/460V AC			500/525V AC			690V AC		
	I_{cu} [kA]	I_{cs} [kA]	Back-up Fuse Rating❶ [A]	I_{cu} [kA]	I_{cs} [kA]	Back-up Fuse Rating❶ [A]	I_{cu} [kA]	I_{cs} [kA]	Back-up Fuse Rating❶ [A]	I_{cu} [kA]	I_{cs} [kA]	Back-up Fuse Rating❶ [A]	I_{cu} [kA]	I_{cs} [kA]	Back-up Fuse Rating❶ [A]
D-Frame, High Inrush, Adjustable Thermal/Fixed Magnetic (18...22 x I_n)															
KTC9-40H-0.16A	100	100		100	100		100	100		100	100		100	100	
KTC9-40H-0.25A	100	100		100	100		100	100		100	100		100	100	
KTC9-40H-0.40A	100	100		100	100		100	100		100	100		100	100	
KTC9-40H-0.63A	100	100		100	100		100	100		100	100		100	100	❷
KTC9-40H-1.0A	100	100		100	100		100	100		100	100		100	100	
KTC9-40H-1.6A	100	100		100	100	❷	100	100	❷	100	100	❷	100	100	
KTC9-40H-2.5A	100	100	❷	100	100		100	100		100	100		6	4	20
KTC9-40H-4.0A	100	100		100	100		100	100		100	100		6	4	35
KTC9-40H-6.3A	100	100		100	100		100	100		100	100		6	4	50
KTC9-40H-10A	100	100		100	100		100	100		100	100		6	3	50
KTC9-40H-16A	100	100		100	50	80	50	25	80	50	25	80	4	3	63
KTC9-40H-20A	100	100		100	25	100	50	25	100	50	25	80	4	2	63
KTC9-40H-25A	100	100		65	25	100	35	12	100	35	12	80	4	2	63
F-Frame, High Inrush, Adjustable Thermal/Fixed Magnetic (16...22 x I_n)															
KTC7-45H-25A	100	100	❷	65	50	100	65	50	100	50	50	100	10	6	80
KTC7-45H-32A	100	100		65	50	125	65	50	125	50	50	125	10	6	100
D-Frame, Motor Circuit Protectors, Fixed Magnetic (14 x I_n)															
KTB9-40H-0.16A	100	100		100	100		100	100		100	100		100	100	
KTB9-40H-0.25A	100	100		100	100		100	100		100	100		100	100	
KTB9-40H-0.40A	100	100		100	100		100	100		100	100		100	100	
KTB9-40H-0.63A	100	100		100	100		100	100		100	100		100	100	❷
KTB9-40H-1.0A	100	100		100	100		100	100		100	100		100	100	
KTB9-40H-1.6A	100	100		100	100	❷	100	100	❷	100	100	❷	100	100	
KTB9-40H-2.5A	100	100	❷	100	100		100	100		100	100		6	4	20
KTB9-40H-4.0A	100	100		100	100		100	100		100	100		6	4	35
KTB9-40H-6.3A	100	100		100	100		100	100		100	100		6	4	50
KTB9-40H-10A	100	100		100	100		100	100		100	100		6	3	50
KTB9-40H-16A	100	100		100	50	80	50	25	80	50	25	80	4	3	63
KTB9-40H-20A	100	100		100	25	100	50	25	100	50	25	80	4	3	63
KTB9-40H-25A	100	100		65	25	100	35	20	100	35	20	80	4	3	63
KTB9-40H-29A	65	50	125	50	25	125	25	15	125	25	15	100	4	3	80
KTB9-40H-32A	65	50	125	50	25	125	25	15	125	25	15	100	4	3	80
KTB9-40H-36A❸	50	35	125	50	25	125	12	6	125	12	6	100	3	2	100
KTB9-40H-40A❸	50	35	125	50	25	125	12	6	125	12	6	100	3	2	100
F-Frame, Motor Circuit Protectors, Fixed Magnetic (13 x I_n)															
KTB7-45H-25A	100	100	100	100	50	100	65	50	100	50	50	100	10	10	80
KTB7-45H-32A	100	100	125	65	50	125	65	50	125	50	50	125	10	6	100
KTB7-45H-45A	100	100	125	65	50	125	50	50	125	50	50	125	10	6	100

❶ Back-up fuses are type gG, aM.
❷ No Back-up fuse required if $I_{cc}<I_{cs}$.
❸ Suitable for continuous operation at 90% current rating at 480V only if used in a minimum enclosure size of 250 x 175 x 150 mm (10 x 7 x 6 in).

Time-Current Characteristic

KTA9 KTA7 Motor Protection (for KTV9, see ratings)

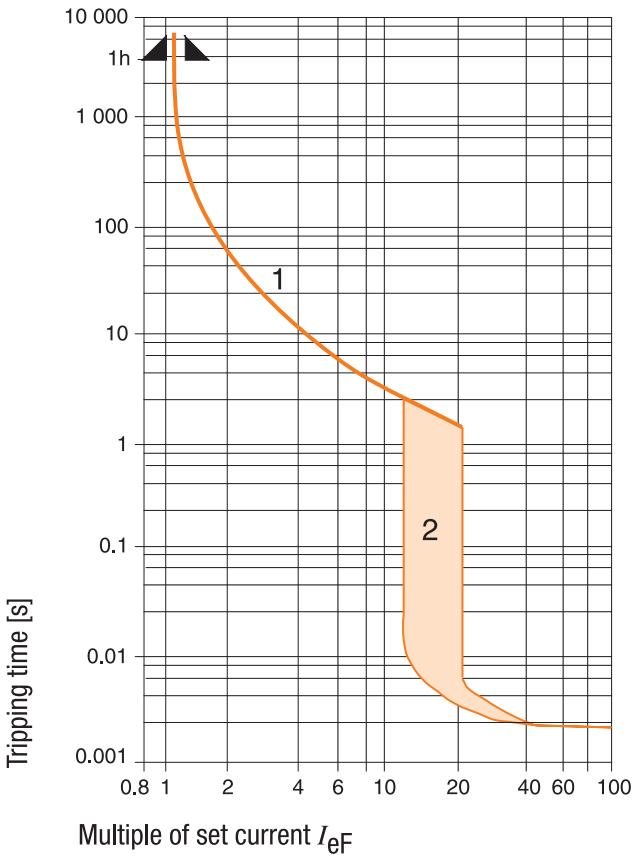

1. **Thermal Release Trip Current**
   The adjustable current-dependent delayed bimetal release protects motors against overload. The curve shows the mean operating current at an ambient temperature of 20°C starting from the cold state. Careful testing and setting ensures effective motor protection even in the case of single-phasing. The overload characteristic is also valid for transformer protection.

2. **Magnetic Release Trip Current**
   The instantaneous magnetic trip has a fixed operating current setting. This corresponds to 13...14 times the maximum value of setting range (high inrush protection -20 x I_e maximum). At a lower overload setting the magnetic trip is correspondingly higher.

Current Setting I_{ef}

The overload trip corresponds to a thermal overload relay in a motor starter conforming to IEC 947-4-1. If a different value is prescribed (e.g., reduced I_e for cooling medium having a temperature higher than 40°C or a place of installation higher than 2000m above sea level), the setting current is equal to the reduced rated current I_e of the motor.

Cut-off Current ❶

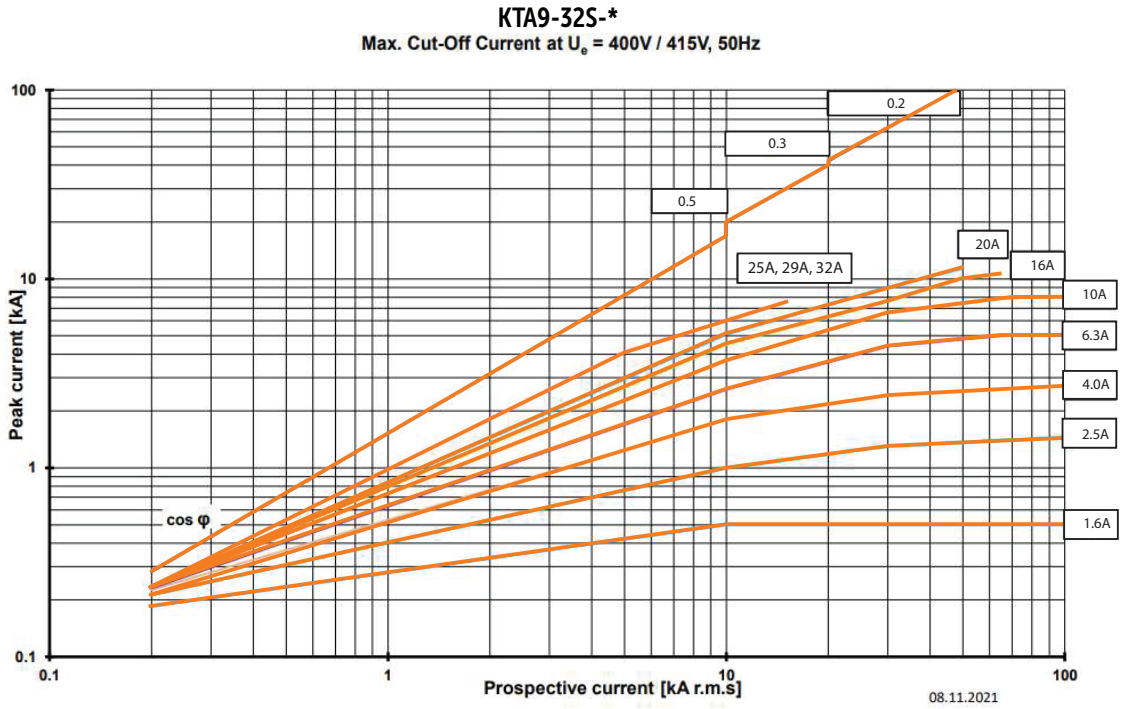

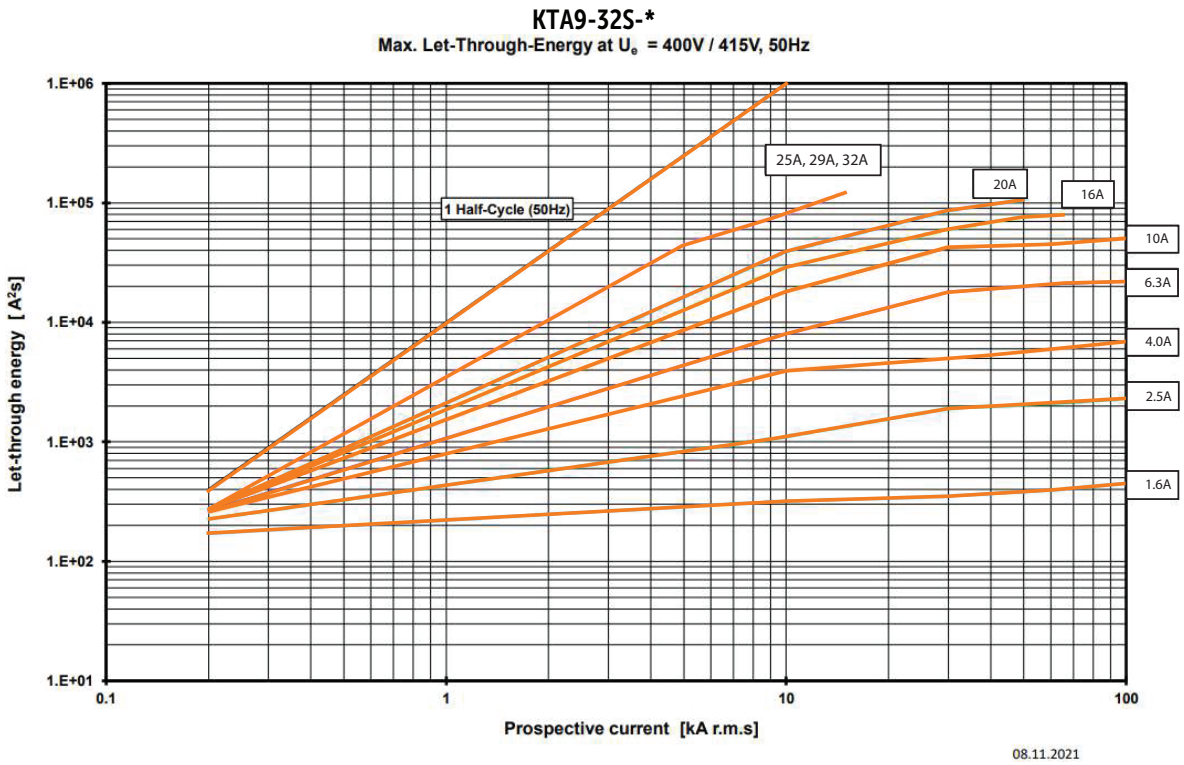

❶ A full size (8-1/2 x 11) set of "Maximum Cut-Off Current (Let-Thru Current)" and "Maximum Let-thru Energy (I2t)" curves for 400...415V, 500V and 690V can be downloaded from http://www.sprecherschuh.com.

Cut-off Current ❶

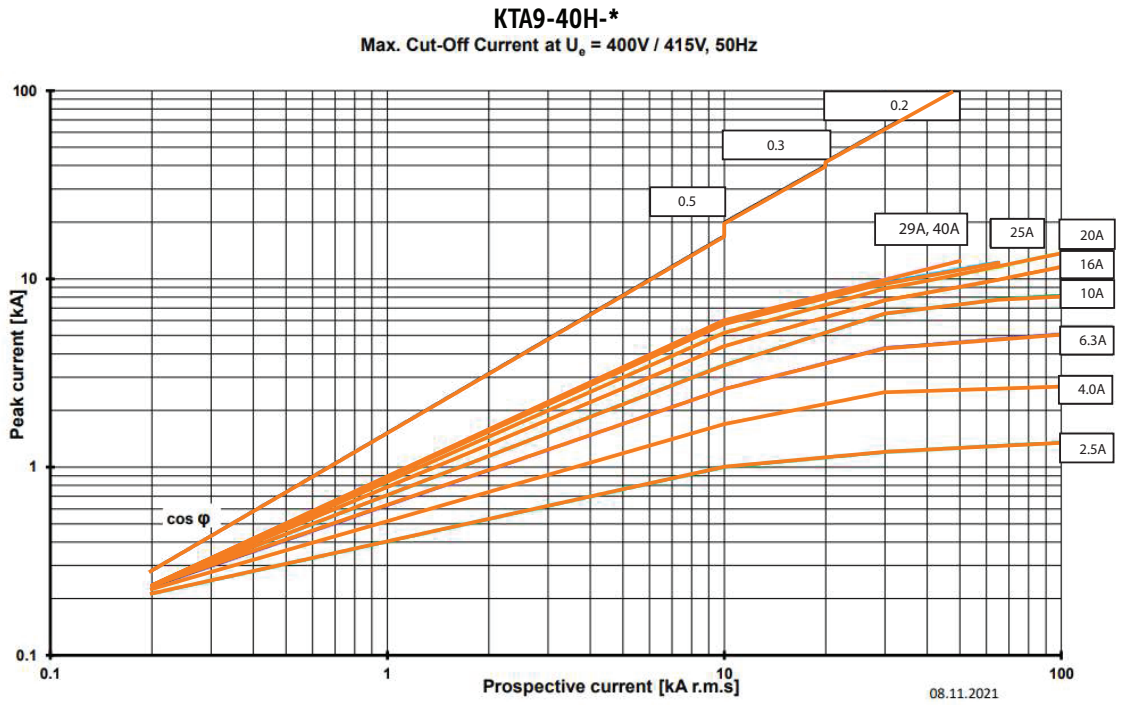

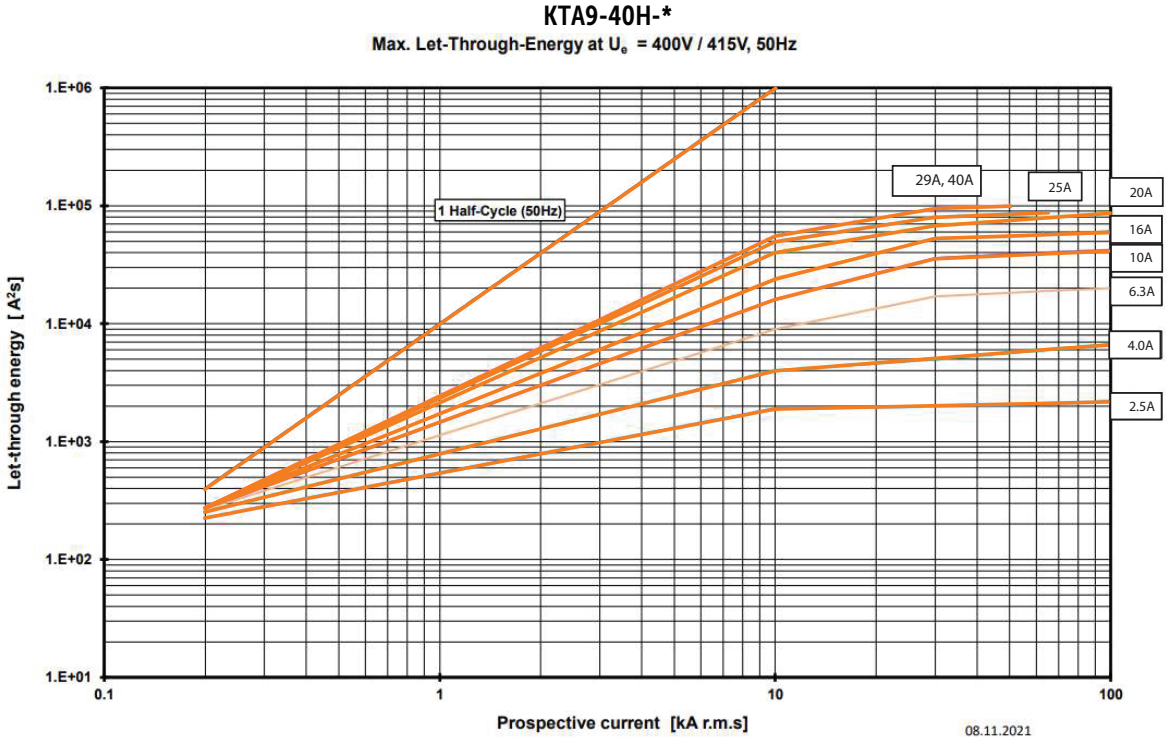

❶ A full size (8-1/2 x 11) set of "Maximum Cut-Off Current (Let-Thru Current)" and "Maximum Let-thru Energy (I2t)" curves for 400...415V, 500V and 690V can be downloaded from http://www.sprecherschuh.com.

Approximate Dimensions

KT_9 Devices and Accessories – Mounting Orientation

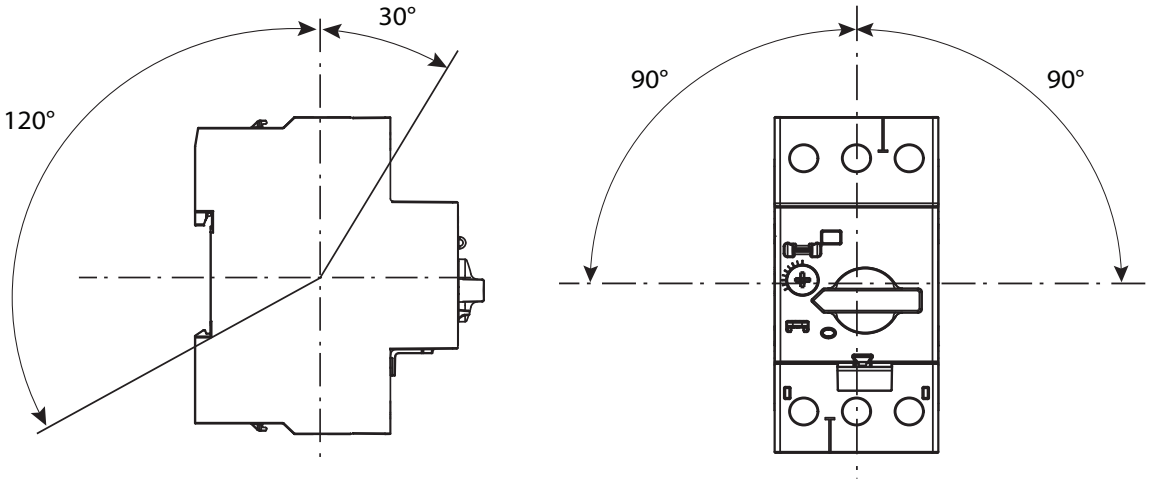

KT_9 Devices and Accessories – Spacing Requirements

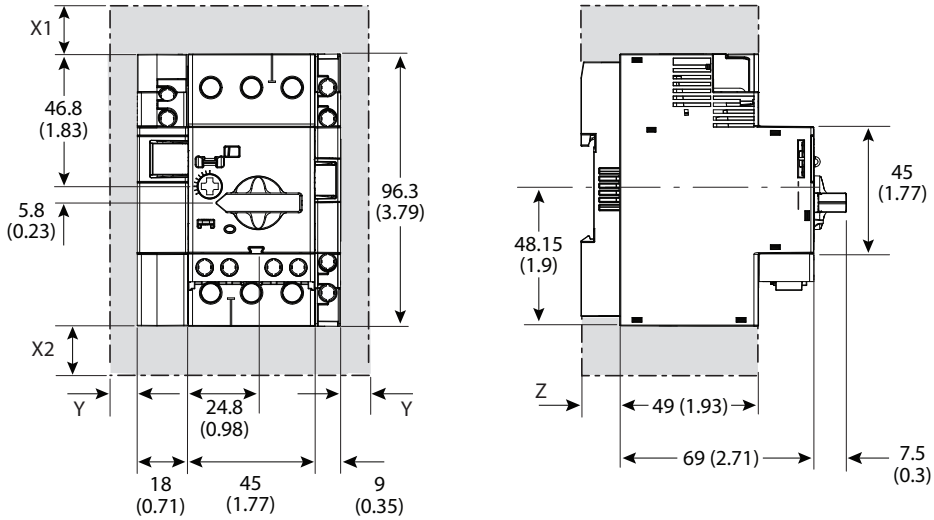

Frame Size	Voltage [V AC]	Minimum Distance to Grounded Parts or Walls [mm (in)]			Z
		X1	X2	Y	
KTA9-32S (C-Frame)	400	30 (1-3/16)	30 (1-3/16)	9 (23/64)	7.5 (19/64)
	500	30 (1-3/16)	30 (1-3/16)	9 (23/64)	
	690	50 (1-31/32)	50 (1-31/32)	30 (1-3/16)	
KT_9-40H (D-Frame)	400	30 (1-3/16)	30 (1-3/16)	9 (23/64)	13.5 (17/32)
	500	30 (1-3/16)	30 (1-3/16)	9 (23/64)	
	690	50 (1-31/32)	50 (1-31/32)	30 (1-3/16)	

❶ A full size (8-1/2 x 11) set of "Maximum Cut-Off Current (Let-Thru Current)" and "Maximum Let-thru Energy (I2t)" curves for 400...415V, 500V and 690V can be downloaded from http://www.sprecherschuh.com.

Motor Protection Circuit Breaker (C-Frame), Cat. No. KTA9-32S...

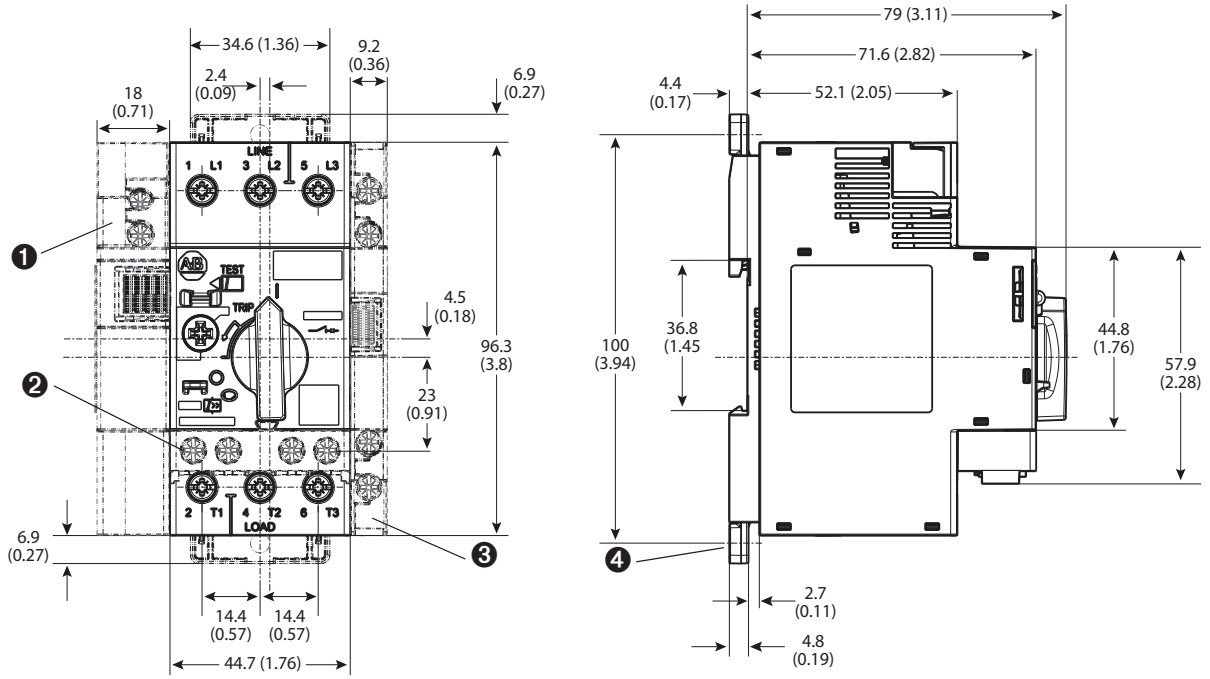

Motor Protection Circuit Breaker (D-Frame), Cat. No. KT_9-40H...

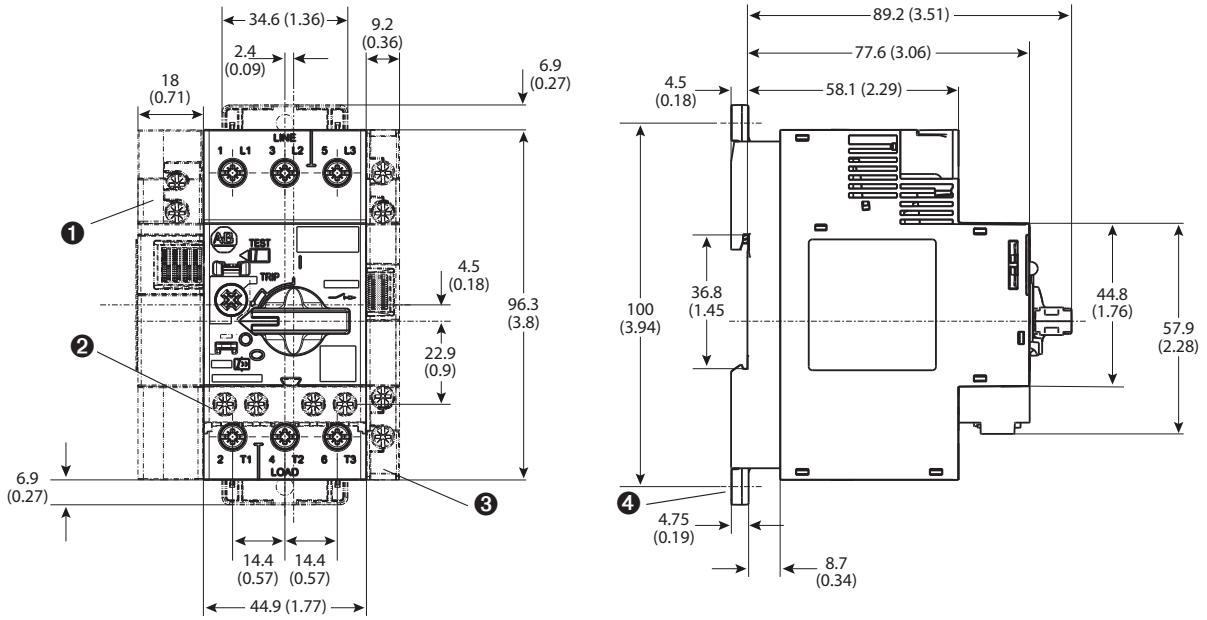

❶ Undervoltage/shunt trip
❷ Auxiliary contact (front mounted)
❸ Auxiliary contact (side mounted)
❹ Screw mounting adapter

Feeder Terminal for Compact Busbar, Cat. No. KT9-40-A3E

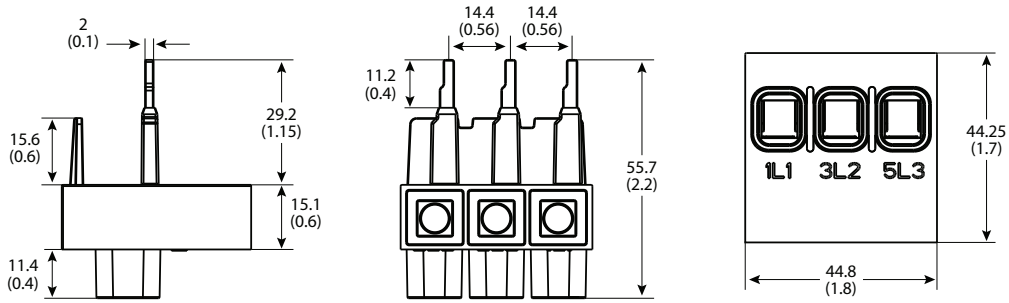

Terminal Cover, Cat. No. KT9-40-DBA

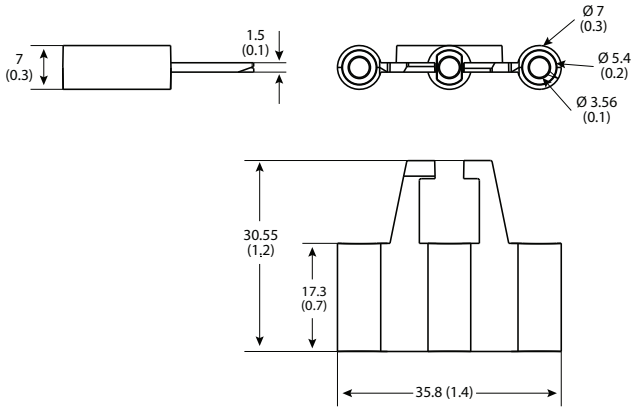

Supply Block, Cat. No. KT9-40-A2E

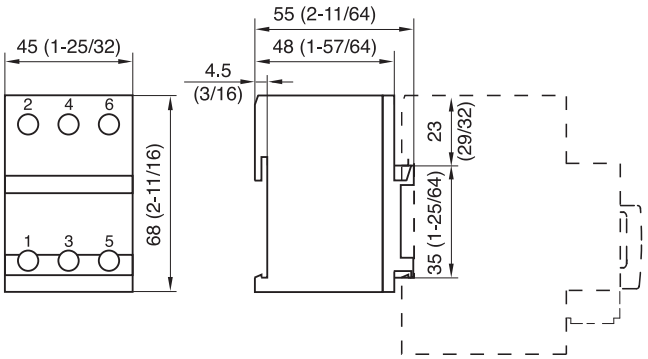

KT9-40-TE Type E adapter on Cat. No. KTA9-32S and KT_9-40H...

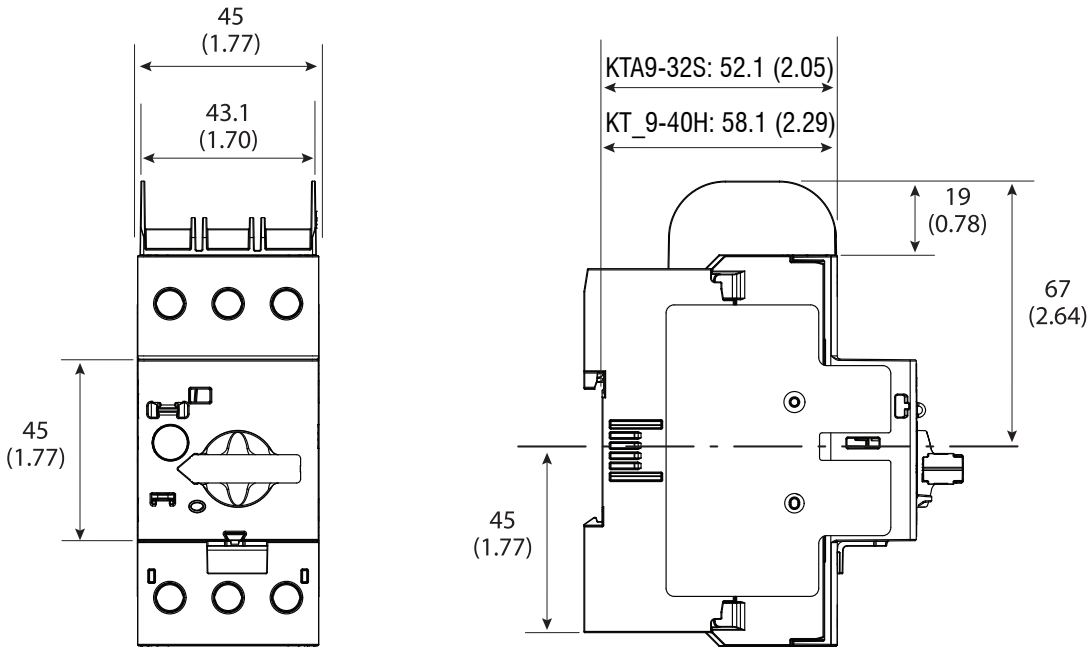

KT_7-45H Mounting Position / Safety Clearance

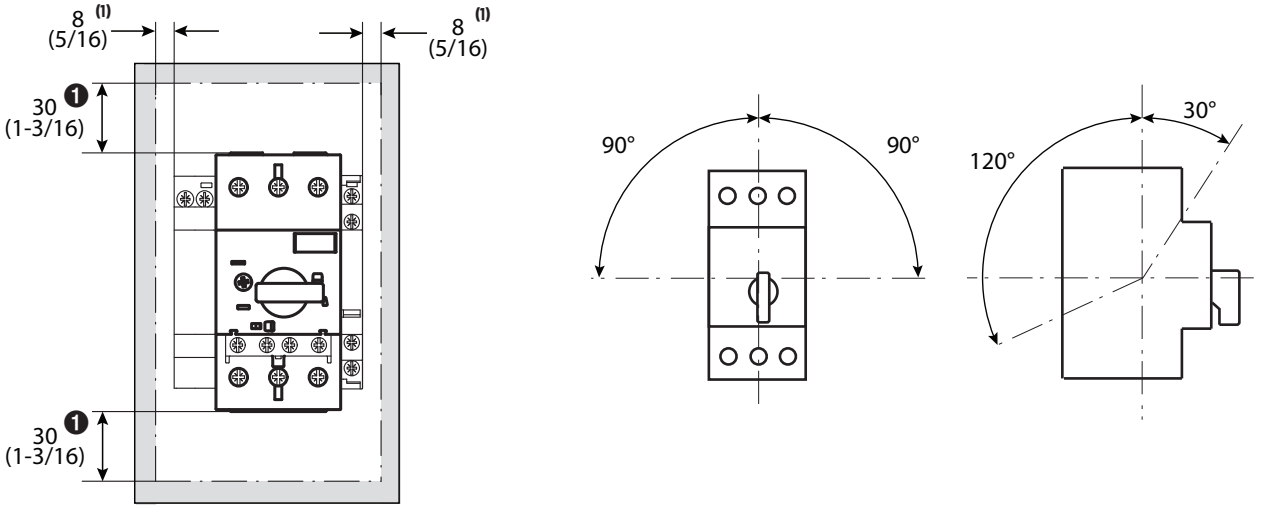

Motor Protection Circuit Breaker (F-Frame), Cat. No. Cat. No. KT_7-45H...

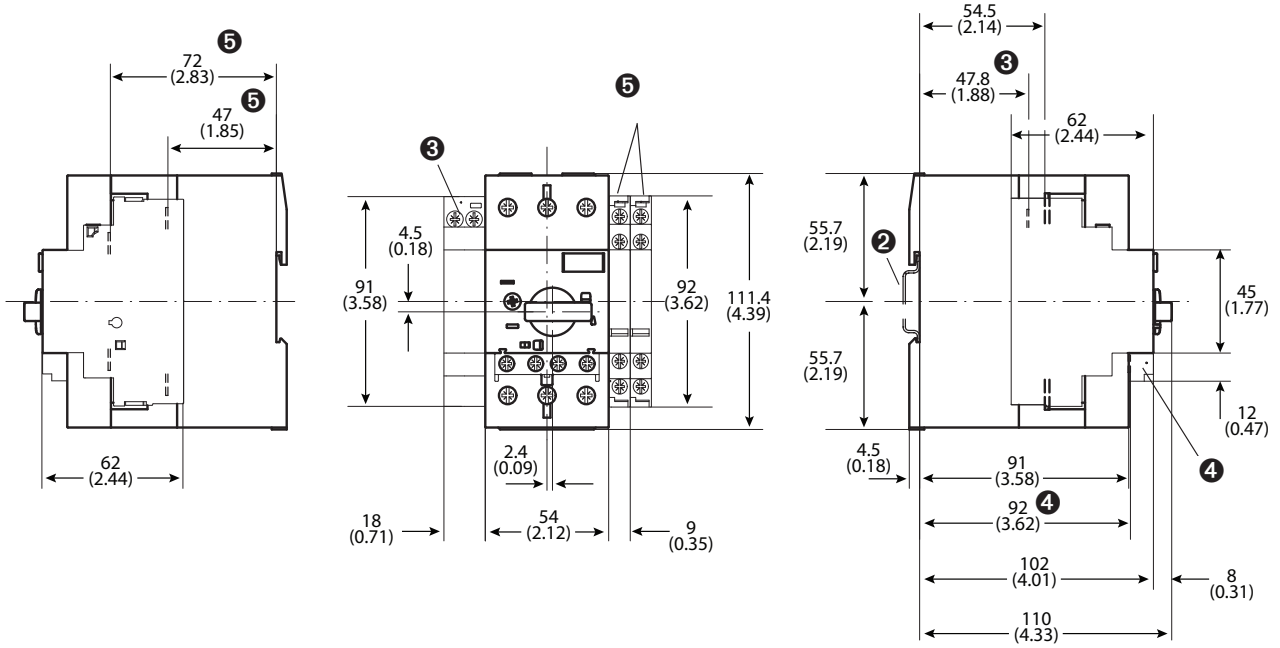

❶ Minimum distance to grounded parts or walls
❷ Mounting on 35 mm DIN Rail
❸ Undervoltage/shunt trip
❹ Auxiliary contact (front mounted)
❺ Auxiliary contact (side mounted)

KT7-45-TE Type E adapter on Cat. No. KT_7-45H...

Dimensions are in millimeters (inches). Dimensions not intended for manufacturing purposes.

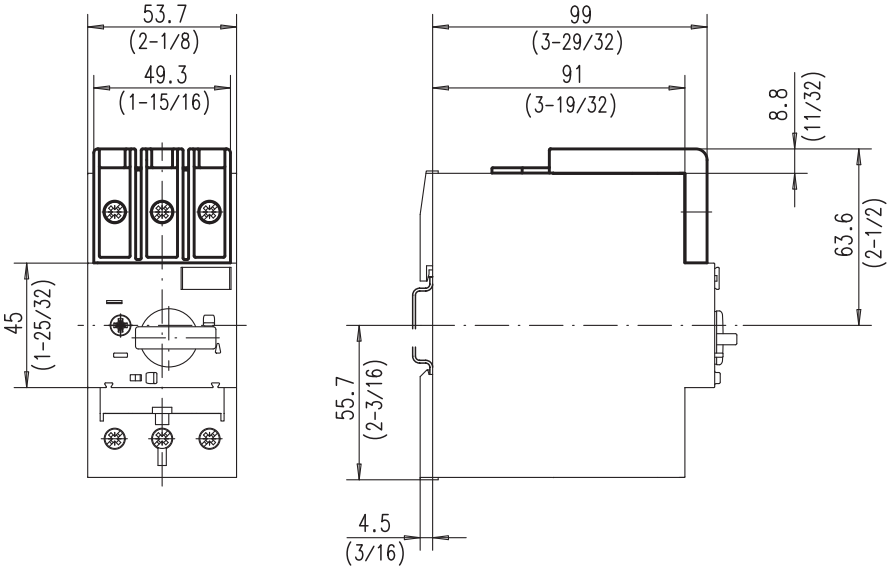

Screw Adapter, Cat. No. KT7-45-AS

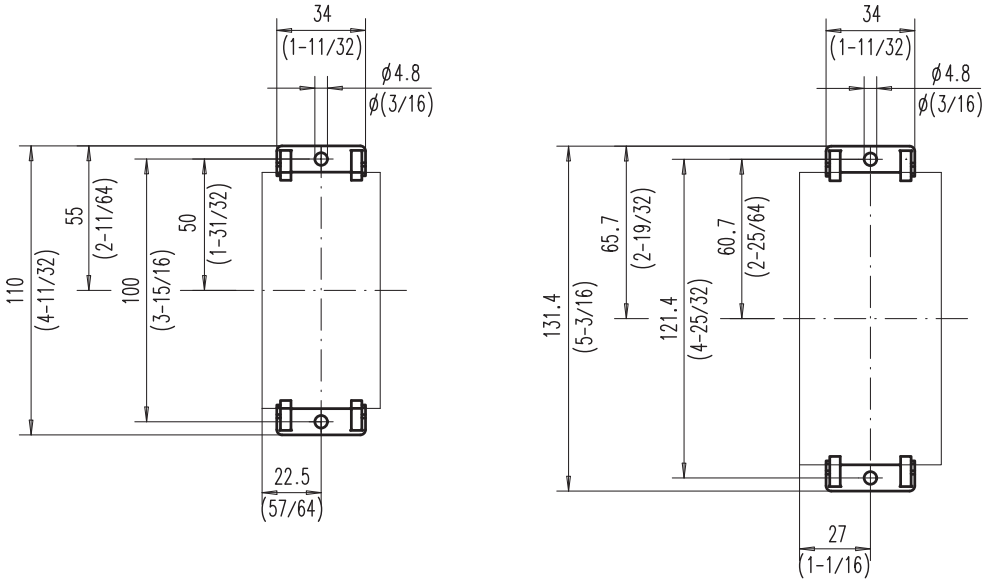

KT9 Handle Assembly with KT9-SHS Shaft Support

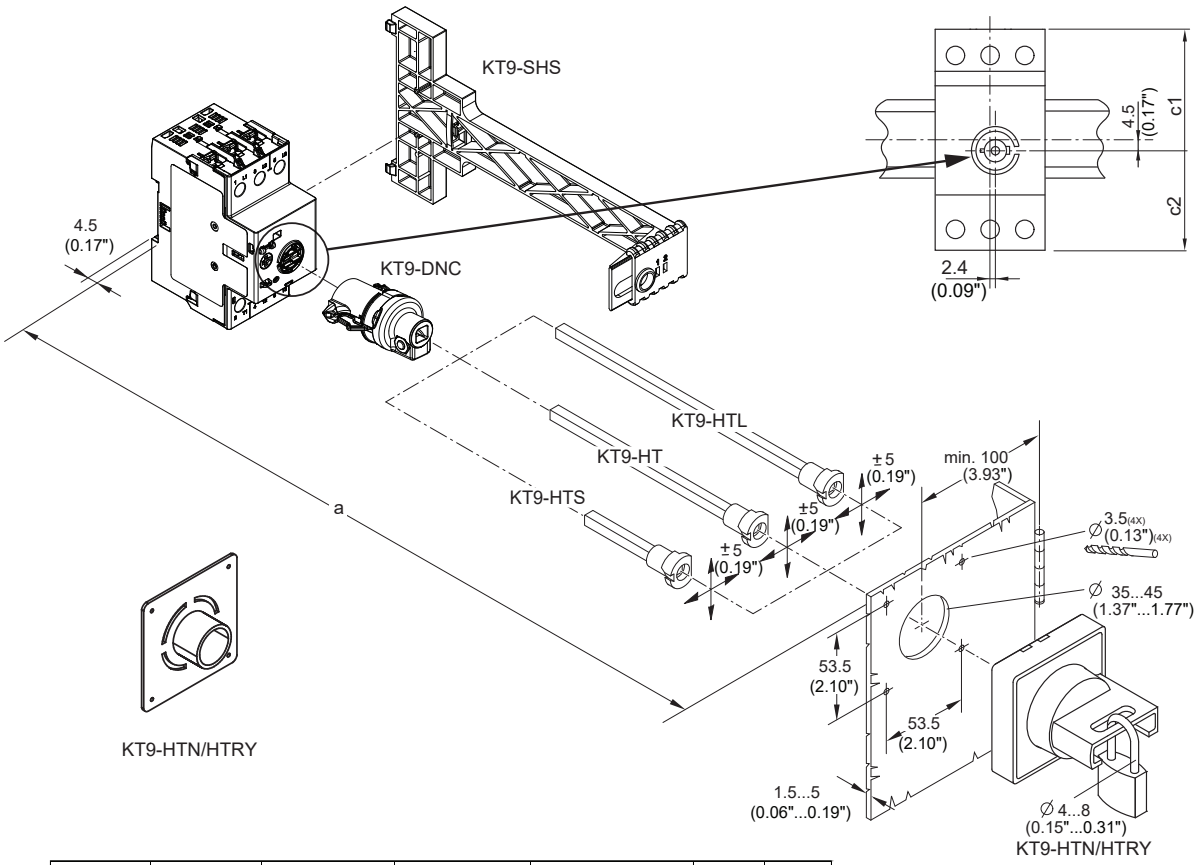

	a KT9-HTS mm inch	a KT9-HT mm inch	a KT9-HTL mm inch	Use KT9-SHS when a> mm inch	c1 mm inch	c2 mm inch
KTA9-32S	136 5.354"	136…358 5.354"…14.094"	136…507 5.354"…19.960"	260 10.236"	52.7 2.074"	43.7 1.720"
KT*9-40H-*	143 5.630"	143…364 5.630"…14.330"	143…513 5.630"…20.196"	266 10.472"	52.7 2.074"	43.7 1.720"
KTU9-40H-*D*	143 5.630"	143…364 5.630"…14.330"	143…513 5.630"…20.196"	266 10.472"	62.1 2.444"	53.1 2.090"

KT9-SHS Shaft Support Dimensions

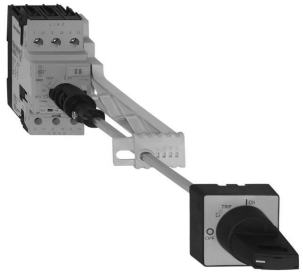

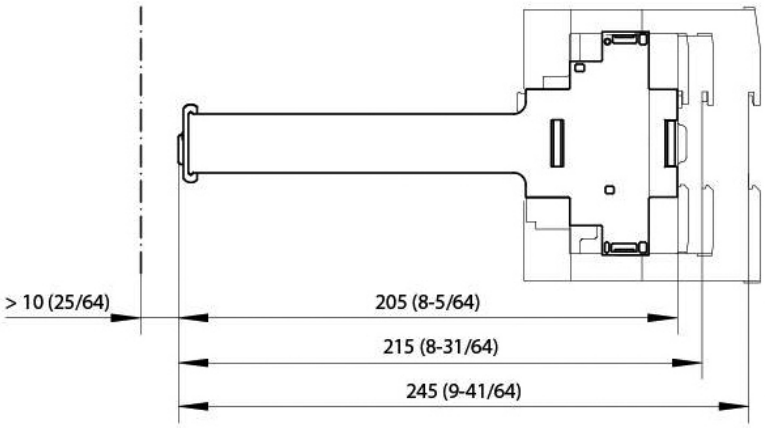

Notes

Series KTU9 UL489 Molded Case Circuit Breakers

Versatile, convenient and space saving... for a variety of applications

Sprecher+Schuh's KTU9 series of UL Molded Case Circuit Breakers are UL489 and CE listed for global applications. The current limiting circuit breaker provides fixed short circuit and overcurrent protection and offers high interrupting ratings for 2- and 3-pole devices from 0.5 to 40A. These Circuit breakers are 100% rated up to 10A.

Accessories are intelligently designed to be field installed. The compact busbars and supply blocks reduce wiring errors and installation labor cost. Connection modules for the CA7 Contactors simplify wiring and can reduce the number of DIN rails required, compacting panel space even further.

Advantages...

- Small foot print saves panel space, just 45 x 96 x 89 mm, up to 50% smaller than traditional MCCBs.
- Interrupt rating of 65kA at 480Y/277V may allow higher overall panel short circuit rating
- Up to 6 times higher interrupting rating vs. traditional miniature circuit breakers.

Ideal Applications...

- Feeder Circuits
  - Small Cabinets
  - Distribution panels
  - Branch circuit protection
  - Transformers
  - Heaters
- Control Circuits
  - Control Transformers
  - Power supplies
- Heating, air conditioning and refrigeration (HACR)
- High-intensity discharge
- Switching duty (SWD) 15 and 20 A

Compare these advanced features

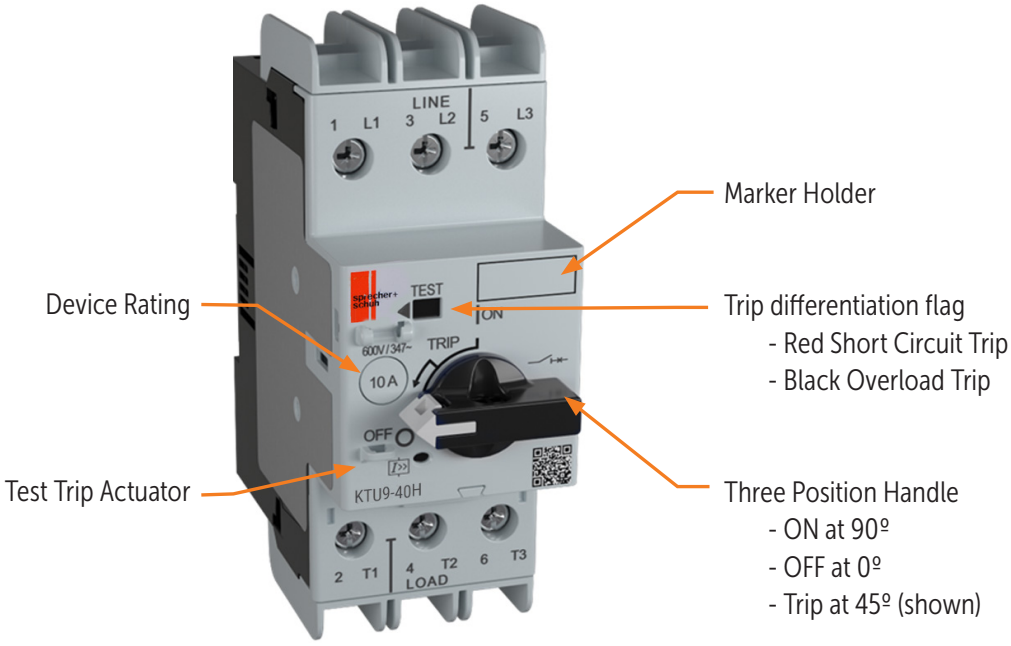

KTU9 Circuit Breaker, Fixed Thermal-Magnetic ❷

Fixed Thermal Current Rating [A]	Magnetic Trip [A]	Interrupting Rating (60Hz) [KA]			Catalog Number
		240V	480Y/277V	600Y/347V	
KTU9-40H-2D — High Interrupting Capacity – 2-Pole					
0.5	15...20 x I_n	100	100	50	**KTU9-40H-2D-0.5** ❶
1.0	15...20 x I_n	100	100	50	**KTU9-40H-2D-1** ❶
2.0	15...20 x I_n	100	100	50	**KTU9-40H-2D-2** ❶
3.0	15...20 x I_n	100	100	50	**KTU9-40H-2D-3** ❶
4.0	15...20 x I_n	100	100	50	**KTU9-40H-2D-4** ❶
5.0	15...20 x I_n	100	100	50	**KTU9-40H-2D-5** ❶
6.0	15...20 x I_n	100	100	50	**KTU9-40H-2D-6** ❶
8.0	15...20 x I_n	100	100	50	**KTU9-40H-2D-8** ❶
10.0	15...20 x I_n	100	100	50	**KTU9-40H-2D-10** ❶
12.0	15...20 x I_n	65	65	25	**KTU9-40H-2D-12**
15.0	15...20 x I_n	65	65	25	**KTU9-40H-2D-15**
20.0	15...20 x I_n	65	65	~	**KTU9-40H-2D-20**
25.0	15...20 x I_n	65	65	~	**KTU9-40H-2D-25**
30.0	15...20 x I_n	65	65	~	**KTU9-40H-2D-30**
35.0	14 x I_n	65	65	~	**KTU9-40H-2D-35**
40.0	12 x I_n	65	65	~	**KTU9-40H-2D-40**
KTU9-40H-3D — High Interrupting Capacity – 3-Pole					
0.5	15...20 x I_n	100	100	50	**KTU9-40H-3D-0.5** ❶
1.0	15...20 x I_n	100	100	50	**KTU9-40H-3D-1** ❶
2.0	15...20 x I_n	100	100	50	**KTU9-40H-3D-2** ❶
3.0	15...20 x I_n	100	100	50	**KTU9-40H-3D-3** ❶
4.0	15...20 x I_n	100	100	50	**KTU9-40H-3D-4** ❶
5.0	15...20 x I_n	100	100	50	**KTU9-40H-3D-5** ❶
6.0	15...20 x I_n	100	100	50	**KTU9-40H-3D-6** ❶
8.0	15...20 x I_n	100	100	50	**KTU9-40H-3D-8** ❶
10.0	15...20 x I_n	100	100	50	**KTU9-40H-3D-10** ❶
12.0	15...20 x I_n	65	65	25	**KTU9-40H-3D-12**
15.0	15...20 x I_n	65	65	25	**KTU9-40H-3D-15**
20.0	15...20 x I_n	65	65	~	**KTU9-40H-3D-20**
25.0	15...20 x I_n	65	65	~	**KTU9-40H-3D-25**
30.0	15...20 x I_n	65	65	~	**KTU9-40H-3D-30**
35.0	14 x I_n	65	65	~	**KTU9-40H-3D-35**
40.0	12 x I_n	65	65	~	**KTU9-40H-3D-40**

Description

The KTU9 is a fixed trip, thermal-magnetic UL489 Molded Case Circuit Breaker.

KTU9-40H-3D

KTU9-40H-2D

❶ Suitable for continuous operation at 100% of rating only if used in minimum enclosure space of 250 x 175 x 150 mm (10 x 7 x 6 in).
❷ KTU9 has independent thermal elements suitable for power distribution applications (not two slide bar differential tripping).

Accessories available for KTU9

	KT9-P... **Front/Side Mount Auxiliaries and Trip Contacts** 1-pole or 2-pole Side-mount not suitable for UL489 applications See page F1:12	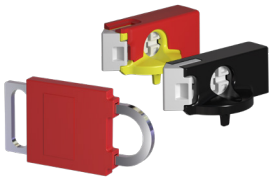	**KT9-KN, KT9-KRY or KT9-DS** See page F1:16
	KT9-UA Undervoltage Trips ❸ (UL 489 application up to 30 A) See page F1:14		**Handle Assemblies** **KT9-SY or KT9-SB** **KT9-HTN or KT9-HTRY ❷** See page F1:15
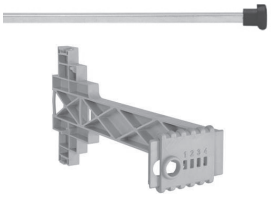	**KT9-HT/HTL, KT9-S_/N_ & KT9-SHS** **Extension Shafts & Support** See page F1:15	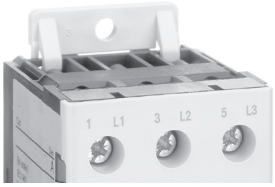	**KT9-N45** **Screw Adaptor** See page F1:16

Extension Shaft Support Assembly
The KT9-SHS is recommended for handle shafts KT9-HT_ or KT9-S_/N_ in lengths greater than 200mm (7.8 inches).
See page F1:31

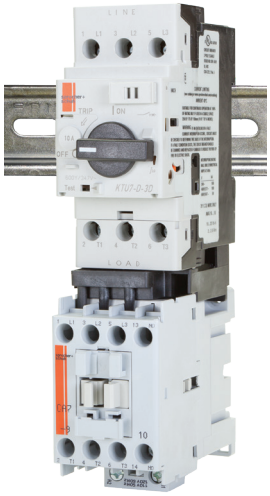

Remote Operation Application
The KTU9 3-Pole unit can be combined with CA7 using Connector Modules to achieve remote operation.

- For CA7-9...23 use KTU9-40H-PEC23

❶ Series B or later.
❷ Series E or later.
❸ Undervoltage Trip Connection Diagram

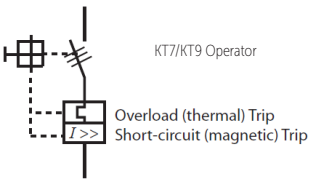

Connecting Modules *(for connecting KTU9 to CA7 AC coil, or CA7 Electronic DC coil contactors)*

Module	Description	For Connecting. . .	To Contactor. . .	Catalog Number
	Connecting Modules • 25 Amp maximum • Provides electrical and mechanical interconnection of KTU9 3-Pole and CA7 (with AC coils) or CA7-_E (with 12V or 24V Electronic DC coils) • KTU9 and Contactor mount on one DIN rail (see previous page for visual)	KTU9-40H	CA7-9..23	**KTU9-D-PEC23**

Compact Busbar System for KTU9

Accessory	Description	For Use With	Catalog Number
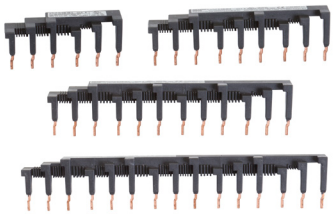	Compact Busbar — 45 mm Spacing (Rated 64 A) • For use with front-mounted auxiliary contact Connects 2-KTU9s Connects 3-KTU9s Connects 4-KTU9s Connects 5-KTU9s (shown)	KTU9-40H-3D	**KTU9-D-DB-45-2** **KTU9-D-DB-45-3** **KTU9-D-DB-45-4** **KTU9-D-DB-45-5**
	Supply Block and Terminal • For power connection to Compact Busbar — 600V, KTU9-D...64A maximum • Top feed — overlaps commoning link • Meets requirements for terminal spacing from source • Compliant with UL489 Terminal Clearance standards	KTU9-40H-3D	**KTU9-D-A3E**

IEC Performance Data

(CSA C22.2, UL 489, IEC / EN 60947-1, -2 in connection with a short-circuit protection device

			KTU9-40H- 2 pole & 3 pole															
			0.5A	**1A**	**2A**	**3A**	**4A**	**5A**	**6A**	**8A**	**10A**	**12A**	**15A**	**20A**	**25A**	**30A**	**35A**	**40A**
Rated Operational Current I_n		[A]	0.5	1	2	3	4	5	6	8	10	12	15	20	25	30	35	40
Fixed Thermal Trip $I_r = I_n$		[A]	0.5	1	2	3	4	5	6	8	10	12	15	20	25	30	35	40
Fixed Magnetic Trip I_m =		[A]	15...20 x I_n															
Ultimate Short Circuit Breaking Capacity (50 Hz) I_{cu}	230/240V	[kA]	100	100	100	100	100	100	100	100	100	100	100	100	100	100	100	100
	400/415V	[kA]	100	100	100	100	100	100	100	100	100	65	65	65	65	65	65	65
	500/525V	[kA]	65	65	65	65	65	65	65	65	65	65	65	65	65	65	65	65
	690V	[kA]	50	50	18	18	18	18	18	10	10	10	10	10	10	10	10	10
Rated Service Short Circuit Breaking Capacity (50 Hz) I_{cs}	230/240V	[kA]	100	100	100	100	100	100	100	100	100	100	100	100	100	100	100	100
	400/415V	[kA]	65	65	65	65	65	65	65	65	65	50	50	50	50	50	50	50
	500/525V	[kA]	65	65	65	65	65	65	65	65	65	50	50	50	25	25	25	25
	690V	[kA]	50	50	10	10	10	10	10	6	6	6	6	6	6	6	6	6

General Data

			KTU9-D
Number of Poles			2 and 3
Rated Insulation Voltage U_i	IEC, / EN	[V]	690
	UL, CSA	[V]	690
HACR Ratings	Suitable for continuous operation at 100% of rating only if used in enclosure space for	480Y/277V	0.5...15 A, cubicle space 250 x 175 x 150 mm (10 x 7 x 6 in)
		600Y/347V	0.5...15 A, cubicle space 300 x 175 x 150mm (11.8 x 7 x 6in)
Rated Impulse Withstand Voltage U_{imp}	Pollution degree		3
	Main circuits U_{imp}/Overvoltage Category		6 kV/III
	Auxiliary circuits U_{imp} /Overvoltage Category		6 kV/III
	Safe separation between main and auxiliary circuits		up to 400V
Rated Frequency		[Hz]	50/60
Utilization Category	IEC 60947-2 (Circuit breaker)		A
Life Span	Mechanical	[operations]	100,000
	Electrical (I_e max.)	[operations]	10,000
	Switching Frequency	[operations/hour]	max. 25
Ambient Temperature	Storage	[°C (°F)]	-40...+80
	Operation	[°C (°F)]	-25...+60 (70 with 15% In current reduction) (-13...+140 °F [+158 with 15% In current reduction])
Climate Resistance	Moisture / Heat Resistance	(600068-2-30)	23 °C (73 °F)/83% relative humidity and 40 °C (104 °F) /92% relative humidity, 56 cycles
	Dry Heat	(60086-2-2)	100 °C (212 °F), relative humidity < 50%, 7 days
	Moisture Heat	(60068-2-3)	40 °C (104 °F), relative humidity 93%, 56 days
Site Altitude		[m]	up to 2000 N.N. (6561 ft)
Protection Class			IP2X when wired
Resistance to Shock, Transport		(60068-2-27)	30G, 11 ms, all axes
Resistance to Vibration, Operation		(60068-2-6)	18 G
Overload Protection Characteristics			Yes per IEC/EN 60947-2, UL489, CSA 22.2
Ambient Temperature Compensation		[°C (°F)]	-25...+60 (-13...+140)
Phase-loss Protection			No
Short-circuit protection (Magnetic)			fixed setting 15...20 x In, (35 A - 14 x In and 40 A - 12 x In)
Backfeeding			Suitable for backfeeding up to 480Y/277V
Total Power loss P_v	at In max	[W]	7.5
Main Disconnect Switch Application			Yes, with accessories
HID (High Intensity Discharge) Listed			0.5...40 A
Switching Duty			15 A, 20 A
Heating, air conditioning and refrigeration (HACR)			0.5...40 A
Application Conditions	For utilization outside North America, assemblies (of products) shall comply to the IEC 61439-1 requirements		
	KTU9 are intended for use in closed areas without hazardous operating conditions such as dust or explosive or corrosive gases. Enclosures of appropriate manner need to be in place to protect devices in such environments.		
Standards Compliance			UL489; CSA C22.2 No. 5(1); IEC / EN 60947-1, -2
Certifications			CE; cULus Listed Circuit Breaker

Connection	No. of conductors	**KTU9 ≤ 15A**	**KTU9 > 15A**
Power Terminals			
Terminal Type		Screw Clamp up to 16 A, M4	Screw Clamp greater than 16 A, M4
Screwdriver		Pozidriv No.2/Blade No.3	Pozidriv No.2/Blade No.3
Solid or stranded	1 conductor	1...6 mm^2	1.5...10 mm^2
	2 conductor	1...2.5 mm^2 2.5...6 mm^2	1.5...4 mm^2 4...10 mm^2
Flexible with ferrule (end sleeve) 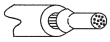	1 conductor	1...6 mm^2	1.5...10 mm^2
	2 conductor	1...2.5 mm^2 2.5...4 mm^2	1.5...4 mm^2 4...10 mm^2
Finely stranded	1 conductor	1.5...6 mm^2	2.5...10 mm^2
	2 conductor	1.5...4 mm^2 2.5...6 mm^2	2.5...6 mm^2 4...10 mm^2
Cross section per UL/CSA solid, stranded	1 conductor	No. 14...10 AWG	No. 14...8 AWG
	2 conductor	No. 14...10 AWG	No. 14...10 AWG No. 12...8 AWG
Stripping length		10 mm (0.39 in.)	10 mm (0.39 in.)
Tightening torque	[Nm]/[lb-in.]	2...2.5 / 18...22	2...2.5/18...22

Time-Current Characteristic

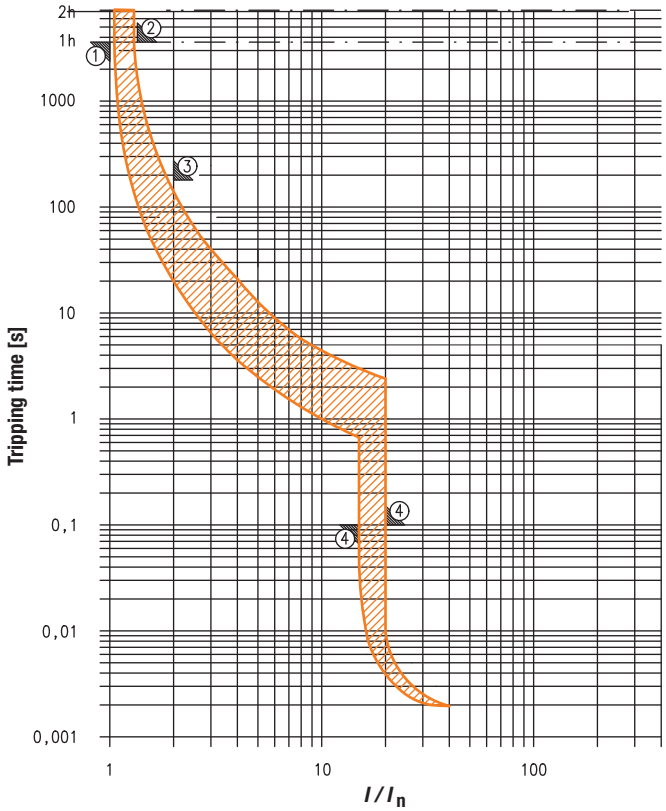

Tripping characteristic acc. to UL 489 and IEC 60947-2

① conventional non-tripping current I_{nt} = 1.0 I_n

② conventional tripping current I_t = 1.35 I_n : $_t$ = <1h

③ 2.0 I_n : $_t$ = 180s max.

Instantaneous tripping acc. to UL 489 and IEC 60947-2

④ Trip Curve : 15...20 I_n

❶

KTU9-40H-D*-*
Max. Cut-Off Current at U_e=480V/60Hz

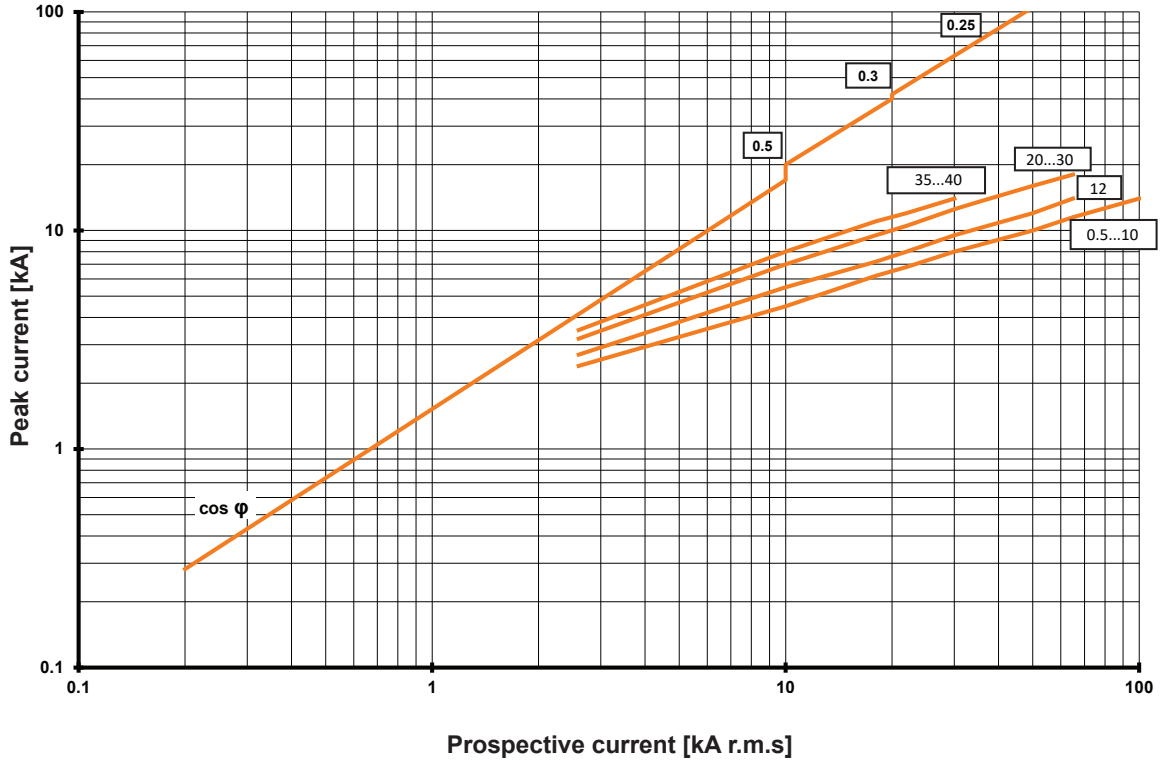

KTU9-40H-D*-*
Max. Let-Through-Energy at U_e=480V/60Hz

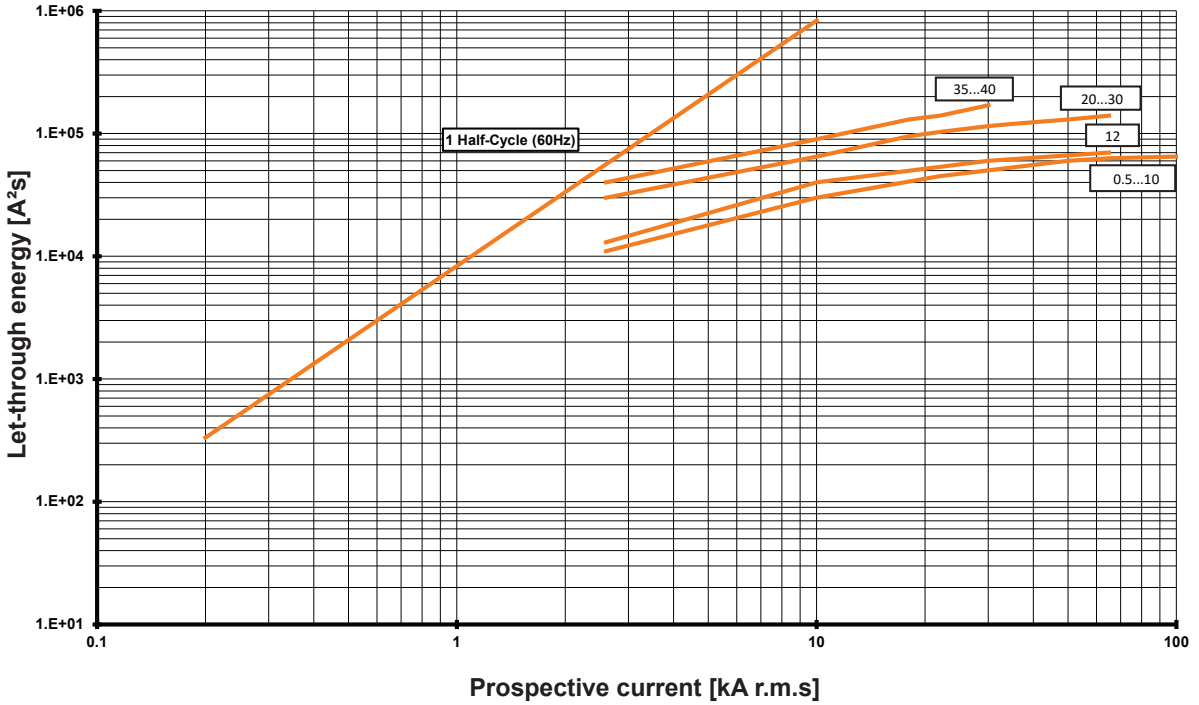

❶ A full size (8-1/2 x 11) set of "Maximum Cut-Off Current (Let-Thru Current)" and "Maximum Let-thru Energy (I2t)" curves for 400...415V, 500V and 690V can be downloaded from http://www.sprecherschuh.com.

Cut-off Current ❶

KTU9-40H-D*-*
Max. Cut-Off Current at U_e=600V/60Hz

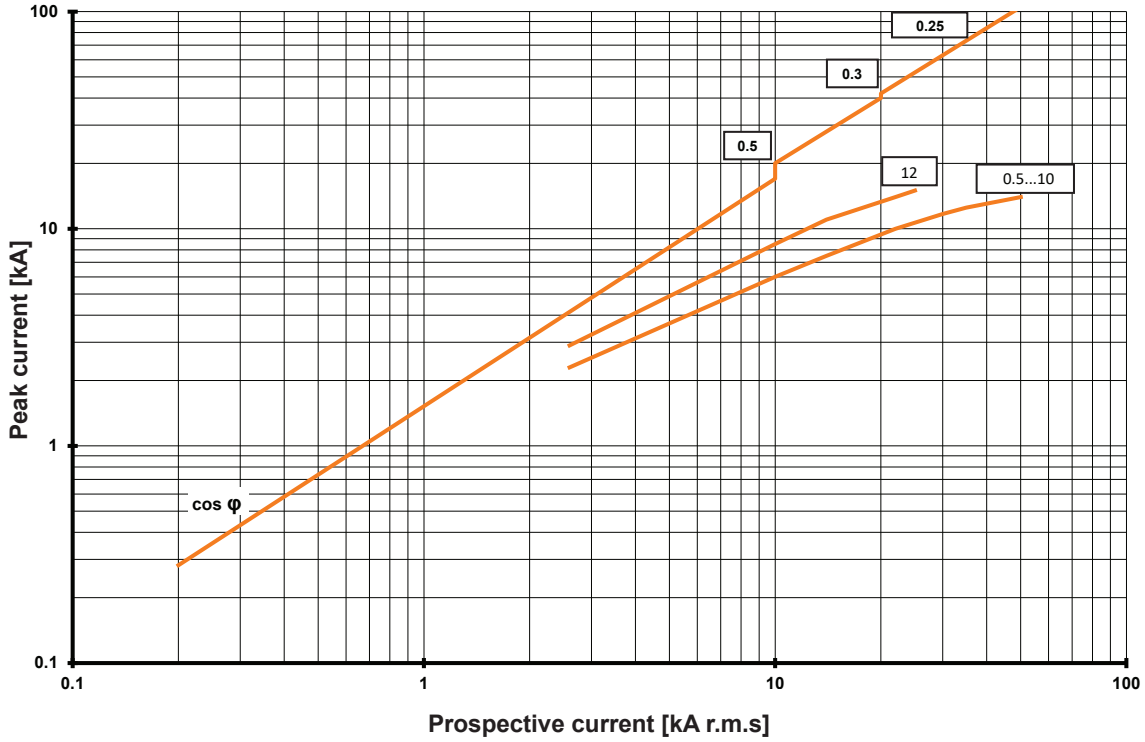

KTU9-40H-D*-*
Max. Let-Through-Energy at U_e=600V/60Hz

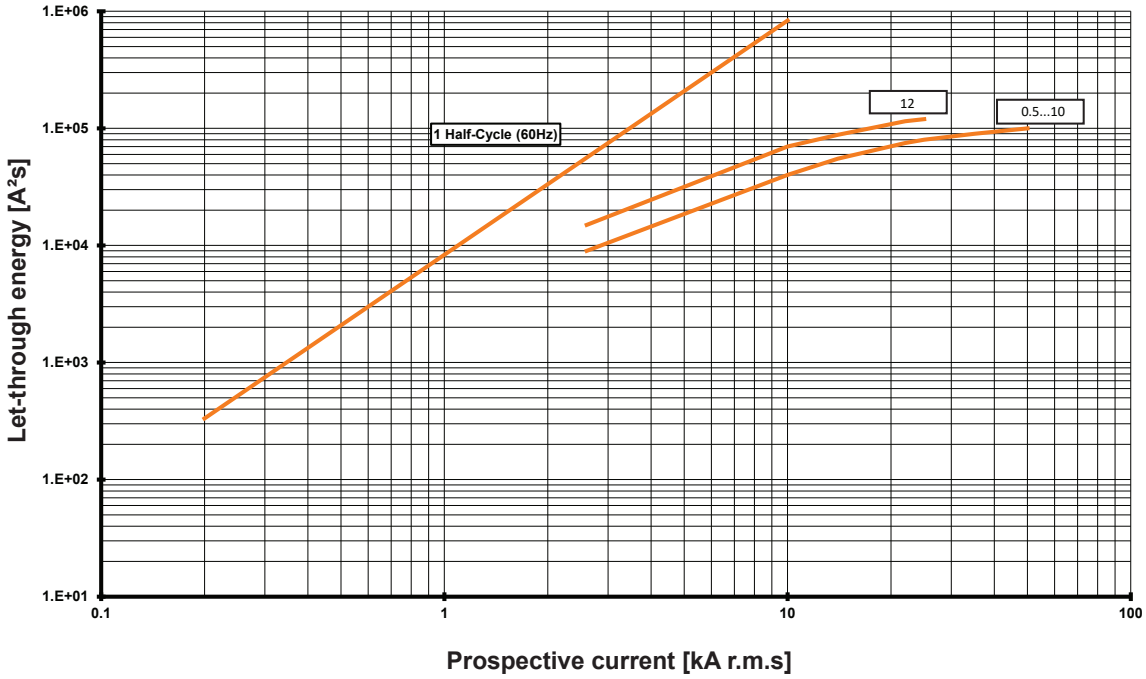

❶ A full size (8-1/2 x 11) set of "Maximum Cut-Off Current (Let-Thru Current)" and "Maximum Let-thru Energy (I2t)" curves for 400...415V, 500V and 690V can be downloaded from http://www.sprecherschuh.com.

KTU9-40H Dimensions

Dimensions are in millimeters (inches). Dimensions not intended for manufacturing purposes.

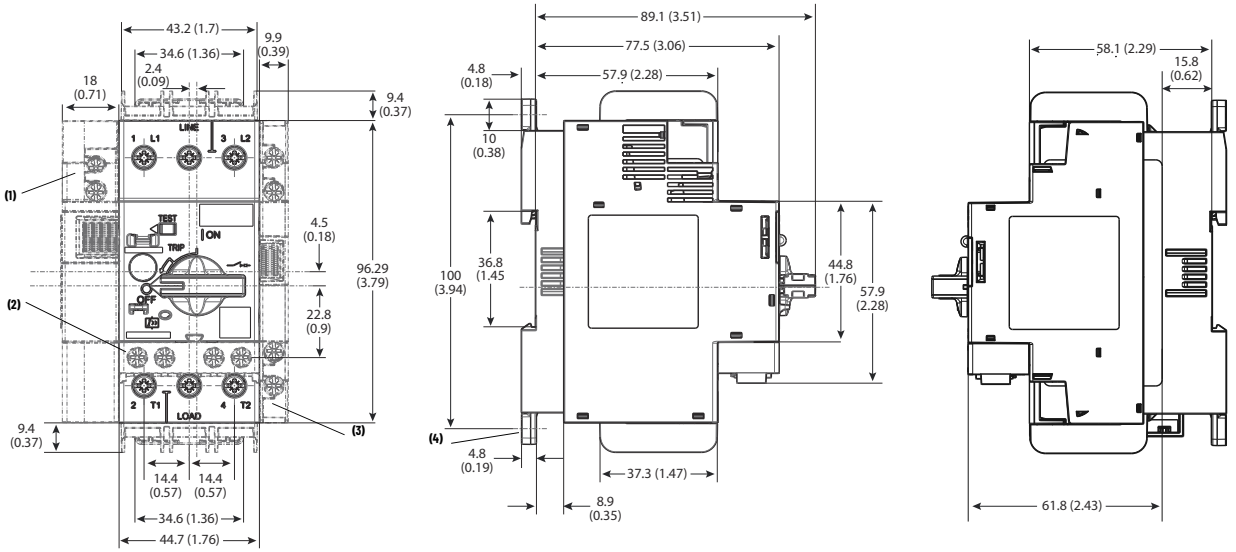

Note	Information
1	Undervoltage/shunt trip
2	Auxiliary contact (front mounted)
3	Auxiliary contact (side mounted)
4	Screw mounting adapter

KTU9 Wiring Diagram

3-Phase
KTU9-40H-3D

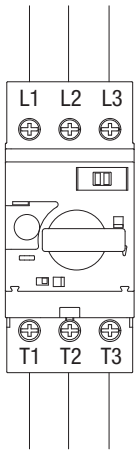

2-Phase
KTU9-40H-2D

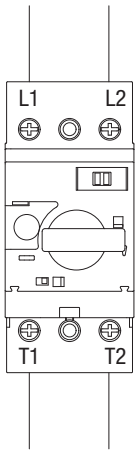

KTU9 with Screw Adaptor KT9-N45

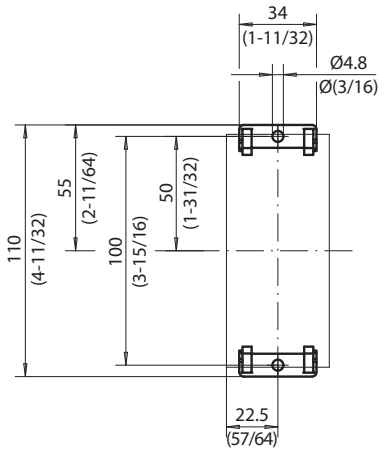

KTU9 Mounting Position

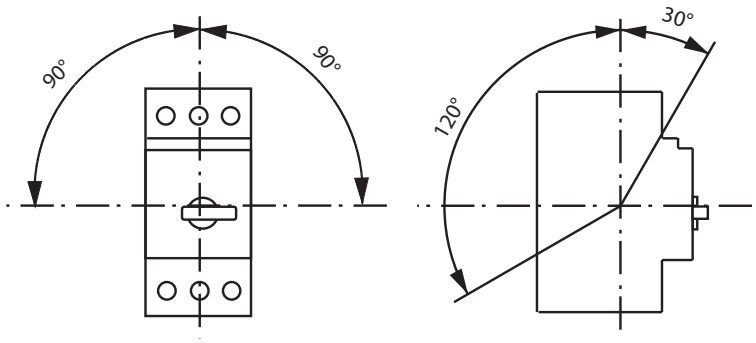

KTU9 Circuit Breaker Enclosure Requirements

Mounting Position and Spacing Requirements

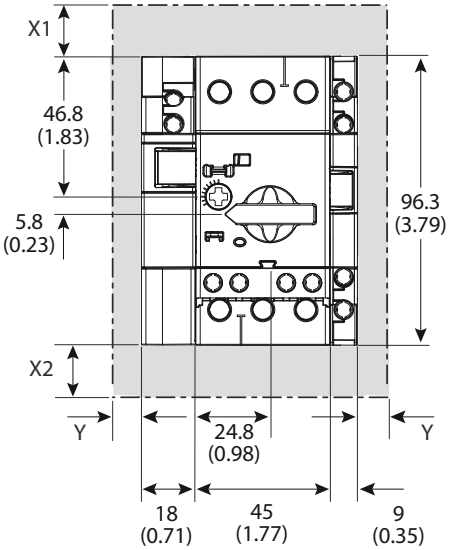

Voltage [V AC]	Minimum Distance to Grounded Parts or Walls [mm (in.)]		
	X1	X2	Y
400	30 (1-3/16)	30 (1-3/16)	9 (23/64)
500	30 (1-3/16)	30 (1-3/16)	9 (23/64)
690	50 (1-31/32)	50 (1-31/32)	30 (1-3/16)

Ecombo Starters

Save space, save money in individual or multi-motor starter applications

F3

ECombo Circuit Controllers

See our online white paper

Methods of Applying KT9 Motor Circuit Controllers

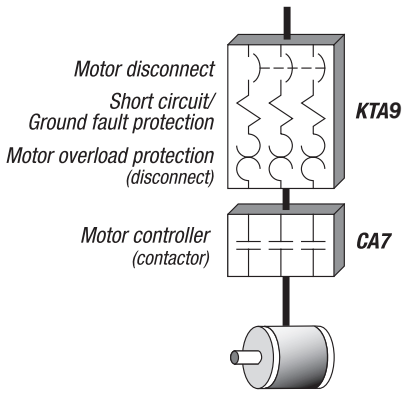

The Ecombo starter line combines a KTA9 self-protected Type E combination controller with a CA7 contactor to form a cost effective compact Type E/F alternative to traditional combination starters.

Sprecher + Schuh's Ecombo starters are the compact alternative to larger and higher priced combination starters. Both models consist of a KTA9 Motor Circuit Controller (cULus listed as a Type E, self-protected combination starter), assembled with a CA7 or CA8 contactor, which provides remote operation (Type E/F). Whether used as a standalone starter or in multi-motor starter applications, Ecombo starters save significant panel space and dollars over conventional combination starter alternatives.

Control and protection for most industrial applications

The Ecombo starter line covers motors to 40 amperes, while providing current limiting short circuit protection up to 65kA. Class 10 thermal overload protection is also assured with a very accurate current adjustment setting which is factory calibrated to the smallest and largest current the unit can handle. A "differential tripping" mechanism also provides accelerated tripping under single phase conditions (see illustration on page F1:3). Ecombo starters may be selected as Type 2 Coordinated per IEC 60947-4-1, or UL Construction Type E or F.

The Ecombo starter...

Ecombo starters (CLE) come standard with a KTA9 Motor Circuit Controller connected to Sprecher + Schuh's CA7 contactor (or CA8 mini contactor) through a specially designed connection module. The unit is DIN-rail mounted. Contactor coil connections are at the bottom of the starter to provide attractive and cost effective panel wiring. Ecombo starters may also be purchased with just three parts and assembled by the user to further increase economy. The CLE + O/L is a three component starter with a KTB9 controller, CA7 contactor, and a CEP7 solid state overload relay, pre-assembled on a bus bar module and ready to mount to a DIN rail or panel.

CLE Ecombo starter

CLE Three-Component starter

Ecombo*Plus*... the complete solution

The EcomboPlus starter (CLS-7) is factory assembled on a W Type module that provides support and allows the starter to be mounted on one or two DIN-rails or screw mounted. Each starter comes standard with a front mounted auxiliary trip contact and optional terminal block control wiring at the top or bottom of the unit.

Reduce panel size, complexity and cost

Because KT9 Motor Circuit Controllers are UL listed as self-protected combination starters, NEC / CEC group motor rules are simplified substantially. In many cases, only a non-fused switch is required for panel disconnect. See our online white paper "Methods of Applying KT9 Motor Circuit Controllers", which explains applying KT9s in multi-motor starter applications.

Series	
CL	Non-reversing S+S
CLU	Reversing S+S

Mounting Style	
E	ECO (no mounting rail)
S	Sliding Din

Contactor Size	
809	9A
812	12A
709	9A
712	12A
716	16A
723	23A
730	30A
737	37A

Contactor Coil	
CA8	
024Z	24V 50Hz / 60Hz
0120	110V 50Hz / 120V 60Hz
0240	240V 50Hz / 60Hz
0600	525V 50Hz/ 600V60Hz CA
024D	24V DC
24DD	24V DC With Diode
CA7	
024Z	24V 50Hz / 60Hz
0120	110V 50Hz / 120V 60Hz
220W	208-220V 50Hz / 208-240V 60Hz
220W	240V 50Hz / 60Hz
0480	440V 50Hz / 480V 60Hz
0600	550V50Hz / 600V 60Hz
024E	24V DC

Contactor Aux	
01	1 N.C.
10	1 N.O.
02	2 N.C.
11	1 N.O. + 1 N.C.
12	1 N.O. + 2 N.C.
21	2 N.O. + 1 N.C.
22	2 N.O. + 2 N.C.
30	3 N.O.
31	3 N.O. + 1 N.C.
32	3 N.O. + 2 N.C.
33	3 N.O. + 3 N.C.

Breaker Frame	
C	KT9 C Frame MCPB only (32S)
D	KT9 D Frame MPCB or MCP (40H)

Breaker Current	
A16	0.1 - 0.16A
A25	0.16A - 0.25A
A40	0.25 - 0.40A
A63	0.40 - 0.63A
B10	0.63 - 1A
B16	1 - 1.6A
B25	1.6 - 2.5A
B40	2.5 - 4A
B63	4 - 6.3A
C10	6.3 - 10A
C16	10 - 16A
C20	14.5 - 20A
C25	18 - 25A
C29	23 - 29A
C32	26.5 - 32A
C36	30 - 36A
C40	34 - 40A

CL	E	-	709	0120	10	-	C	B40	B		
CLU	E	-	723	024E	22	-	C	C20	B		
CL	E	-	712	024Z	10	-	C	C16	B	-	FDB

Options	
-KN	Black Lockable Knob
-KY	Red/Yellow Lockable Knob
-TE	Spacing Adapter for Type E
-W	Mounting Module
-JE	Interface Adapter

Breaker Aux Code	
X	w/o Aux. and Trip Contacts
A	1 NC
B	1 NO
C	1 NO + 1 NC
D	2 NO
E	2 NC
R	1 NC + 1 NO (SC+OL)
S	1 NO + 1 NO (SC+OL)
T	1 NO + 1 NC (SC+OL)
N	1 NO (SC+OL) + 1 NC (SC)

Overload Relay	
-	No Separate Overload Relay
FAB	0.1...0.5A Solid State
FBB	0.12...1.0A Solid State
FCB	1.0...5.0A Solid State
FDB	3.2...16A Solid State
FEB	5.4...27A Solid State
FED	5.4...27A Solid State
FFD	11...55A Solid State

This illustration is for reference only.
Turn to the appropriate page to determine specific catalog number.

❶ (D & E) designations indicate DC coil.

Non-Reversing Ecombo Starters with AC Coil, Series CA8 Contactor

Thermal Trip [A]	Magnetic Trip [A]	Typical Three Phase [HP]				Catalog Number ❷
		200V	230V	460V	575V	
KTA9-32S – Standard Interrupting Capacity (14 x In)						
0.10...0.16A	2.2	~	~	~	~	**CLE-809✱10-CA16X**
0.16...0.25A	3.5	~	~	~	~	**CLE-809✱10-CA25X**
0.25...0.40A	5.6	~	~	~	~	**CLE-809✱10-CA40X**
0.40...0.63A	8.8	~	~	~	~	**CLE-809✱10-CA63X**
0.63...1.0A	14	~	~	1/2	1/2	**CLE-809✱10-CB10X**
1.0...1.6A	22	~	~	3/4	3/4	**CLE-809✱10-CB16X**
1.6...2.5A	35	1/2	1/2	1	1-1/2	**CLE-809✱10-CB25X**
2.5...4.0A	56	3/4	3/4	2	3	**CLE-809✱10-CB40X**
4.0...6.3A	88	1	1-1/2	3	5 ❻	**CLE-809✱10-CB63X**
6.3...10A	140	2	2	5	5 ❻	**CLE-809✱10-CC10X**
6.3...10A	140	2	2	5	7-1/2 ❻	**CLE-812✱10-CC10X**
10...16A	224	3	3	7-1/2	10 ❻	**CLE-812✱10-CC16X**

Includes:
- KTA9-32S (Standard Interrupting Capacity) Motor Controller
- CA8 Contactor
- Connecting Module (Cat.# KT9-32S-PEK12)
- Terminal Adaptor for Type F Applications (Cat.# KT9-40-TE)
- Can mount on one DIN-rail

Reversing Ecombo Starters with AC Coil, Series CA8 Contactor

Thermal Trip [A]	Magnetic Trip [A]	Typical Three Phase [HP]				Catalog Number ❷
		200V	230V	460V	575V	
KTA9-32S – Standard Interrupting Capacity (14 x In)						
0.10...0.16A	2.2	~	~	~	~	**CLUE-809✱02-CA16X**
0.16...0.25A	3.5	~	~	~	~	**CLUE-809✱02-CA25X**
0.25...0.40A	5.6	~	~	~	~	**CLUE-809✱02-CA40X**
0.40...0.63A	8.8	~	~	~	~	**CLUE-809✱02-CA63X**
0.63...1.0A	14	~	~	1/2	1/2	**CLUE-809✱02-CB10X**
1.0...1.6A	22	~	~	3/4	3/4	**CLUE-809✱02-CB16X**
1.6...2.5A	35	1/2	1/2	1	1-1/2	**CLUE-809✱02-CB25X**
2.5...4.0A	56	3/4	3/4	2	3	**CLUE-809✱02-CB40X**
4.0...6.3A	88	1	1-1/2	3	5 ❻	**CLUE-809✱02-CB63X**
6.3...10A	140	2	2	5	5 ❻	**CLUE-809✱02-CC10X**
6.3...10A	140	2	2	5	7-1/2 ❻	**CLUE-812✱02-CC10X**
10...16A	224	3	3	7-1/2	10 ❻	**CLUE-812✱02-CC16X**

Includes:
- KTA9-32S (Standard Interrupting Capacity) Motor Controller
- One Reversing CAU8 Contactor with Mechanical Interlock (CM8)
- Connecting Module Cat.# KT9-32S-PEK12)
- Terminal Adaptor for Type F Applications (Cat.# KT9-40-TE)
- Reversing Power Wiring Kit (Cat.# CAUT8-PW)
- Can mount on one DIN-rail

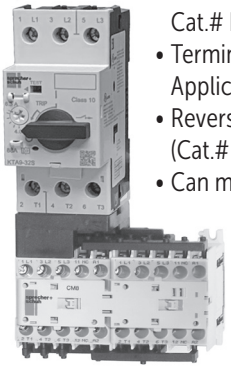

AC Coil Code	Voltage Range	
	50 Hz	60 Hz
024Z	**24V**	**24V**
0120	**110V**	**120V**
0240	240V	240V
0380 ❹	Use Coil Code 0400	
0400 ❹	400V	400V
0480	**440V**	**480V**
0575 ❺	Use Coil Code 0600	
0600 ❺	525V	600V

Horsepower ratings shown in the tables are for reference only. ***The final selection of the controller depends on the actual motor full load current and service factor.***

- *For motor with service factor less than 1.15.* Use motor nameplate full load current times 0.9 and choose the motor starter with the appropriate current range. Example: Motor F.L.C. = 4.2A; S.F. = 1.0. – 4.2A x 0.9 = 3.78A. Select Catalog Number KTA9-32S-4.0A.

❶ KAIC Assembly Rating Index. See pages F3:17-F3:20 for Application Rating Guide.
❷ Does not include auxiliary contacts. See Factory Options on page F3:16 for additional auxiliary contact configurations.
❸ The coil codes shown are the most commonly stocked items. Contact your Sprecher + Schuh representative if special voltages are required.
❹ The European Community has agreed that 400V is the nominal voltage in lieu of 380V. Use this code when 380V is required.
❺ Use this code for 575V applications.
❻ Catalog numbers with specific voltages (i.e. @ 575V) shaded in gray are suitable for use as a manual motor starter only because they are not Type E rated. See page F1:5 for ratings.

Ordering Instructions

Specify Catalog Number	
Replace (✱) with Coil Code	**See Coil Code table on this page for codes.**

Non-Reversing Ecombo Starters with DC Coil, Series CA8 Contactor

Thermal Trip [A]	Magnetic Trip [A]	Typical Three Phase [HP]				Catalog Number ❷
		200V	230V	460V	575V	
KTA9-32S – Standard Interrupting Capacity (14 x In)						
0.10...0.16A	2.2	~	~	~	~	**CLE-809✱D10-CA16X**
0.16...0.25A	3.5	~	~	~	~	**CLE-809✱D10-CA25X**
0.25...0.40A	5.6	~	~	~	~	**CLE-809✱D10-CA40X**
0.40...0.63A	8.8	~	~	~	~	**CLE-809✱D10-CA63X**
0.63...1.0A	14	~	~	1/2	1/2	**CLE-809✱D10-CB10X**
1.0...1.6A	22	~	~	3/4	3/4	**CLE-809✱D10-CB16X**
1.6...2.5A	35	1/2	1/2	1	1-1/2	**CLE-809✱D10-CB25X**
2.5...4.0A	56	3/4	3/4	2	3	**CLE-809✱D10-CB40X**
4.0...6.3A	88	1	1-1/2	3	5 ❻	**CLE-809✱D10-CB63X**
6.3...10A	140	2	2	5	5 ❻	**CLE-809✱D10-CC10X**
6.3...10A	140	2	2	5	7-1/2 ❻	**CLE-812✱D10-CC10X**
10...16A	224	3	3	7-1/2	10 ❻	**CLE-812✱D10-CC16X**

Includes:

- KTA9-32S (Standard Interrupting Capacity) Motor Controller
- CA8 Contactor
- Connecting Module (Cat.# KT9-32S-PEK12)
- Terminal Adaptor for Type F Applications (Cat.# KT9-40-TE)
- Can mount on one DIN-rail

Reversing Ecombo Starters with DC Coil, Series CA8 Contactor

Thermal Trip [A]	Magnetic Trip [A]	Typical Three Phase [HP]				Catalog Number ❷
		200V	230V	460V	575V	
KTA9-32S – Standard Interrupting Capacity (14 x In)						
0.10...0.16A	2.2	~	~	~	~	**CLUE-809✱D02-CA16X**
0.16...0.25A	3.5	~	~	~	~	**CLUE-809✱D02-CA25X**
0.25...0.40A	5.6	~	~	~	~	**CLUE-809✱D02-CA40X**
0.40...0.63A	8.8	~	~	~	~	**CLUE-809✱D02-CA63X**
0.63...1.0A	14	~	~	1/2	1/2	**CLUE-809✱D02-CB10X**
1.0...1.6A	22	~	~	3/4	3/4	**CLUE-809✱D02-CB16X**
1.6...2.5A	35	1/2	1/2	1	1-1/2	**CLUE-809✱D02-CB25X**
2.5...4.0A	56	3/4	3/4	2	3	**CLUE-809✱D02-CB40X**
4.0...6.3A	88	1	1-1/2	3	5 ❻	**CLUE-809✱D02-CB63X**
6.3...10A	140	2	2	5	5 ❻	**CLUE-809✱D02-CC10X**
6.3...10A	140	2	2	5	7-1/2 ❻	**CLUE-812✱D02-CC10X**
10...16A	224	3	3	7-1/2	10 ❻	**CLUE-812✱D02-CC16X**

Includes:

- KTA9-32S (Standard Interrupting Capacity) Motor Controller
- One Reversing CAU8 Contactor with Mechanical Interlock (CM8)
- Connecting Module Cat.# KT9-32S-PEK12)
- Terminal Adaptor for Type F Applications (Cat.# KT9-40-TE)
- Reversing Power Wiring Kit (Cat.# CAUT8-PW)
- Can mount on one DIN-rail

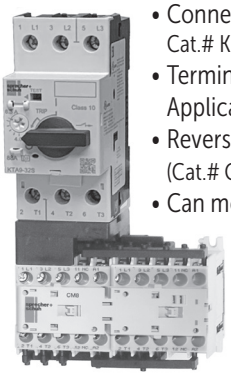

DC Coil Code	Voltage
012	12V
024	24V ❹
110	110V
125	125V
220	220V

Horsepower ratings shown in the tables are for reference only.
The final selection of the controller depends on the actual motor full load current and service factor.

- *For motor with service factor less than 1.15.* Use motor nameplate full load current times 0.9 and choose the motor starter with the appropriate current range. Example: Motor F.L.C. = 4.2A; S.F. = 1.0. – 4.2A x 0.9 = 3.78A. Select Catalog Number KTA9-32S-4.0A.

Ordering Instructions

Specify Catalog Number	
Replace (✱) with Coil Code	**See Coil Code table on this page for codes.**

❶ KAIC Assembly Rating Index. See pages F3:17-F3:20 for Application Rating Guide.
❷ Does not include auxiliary contacts. See Factory Options on page F3:16 for additional auxiliary contact configurations.
❸ The coil codes shown are the most commonly stocked items. Contact your Sprecher + Schuh representative if special voltages are required.
❹ Integrated surge suppressor for coil is available. See page F3:16 for options.
❺ The European Community has agreed that 400V is the nominal voltage in lieu of 380V. Use this code when 380V is required.
❻ Use this code for 575V applications.
❼ Catalog numbers with specific voltages (i.e. @ 575V) shaded in gray are suitable for use as a manual motor starter only because they are not Type E rated. See page F1:5 for ratings.

Non-Reversing Ecombo Starters with AC Coil, Series CA7 Contactor ❷

Thermal Trip [A]	Magnetic Trip [A]	Typical Three Phase [HP]				Catalog Number ❶
		200V	230V	460V	575V	
KTA9-32S - Standard Interrupting Capacity (14 x In)						
0.10...0.16A	2.2	~	~	~	~	**CLE-709✱10-CA16B**
0.16...0.25A	3.5	~	~	~	~	**CLE-709✱10-CA25B**
0.25...0.40A	5.6	~	~	~	~	**CLE-709✱10-CA40B**
0.40...0.63A	8.8	~	~	~	~	**CLE-709✱10-CA63B**
0.63...1.0A	14	~	~	1/2	1/2	**CLE-709✱10-CB10B**
1.0...1.6A	22	~	~	3/4	3/4	**CLE-709✱10-CB16B**
1.6...2.5A	35	1/2	1/2	1	1-1/2	**CLE-709✱10-CB25B**
2.5...4.0A	56	3/4	3/4	2	3	**CLE-709✱10-CB40B**
4.0...6.3A	88	1	1-1/2	3	5 ❹	**CLE-709✱10-CB63B**
6.3...10A	140	2	2	5	7-1/2 ❹	**CLE-709✱10-CC10B**
6.3...10A	140	3	3	7-1/2	7-1/2 ❹	**CLE-712✱10-CC10B**
10...16A	224	3	5	10	10 ❹	**CLE-716✱10-CC16B**
KTA9-40H – High Interrupting Capacity (14 x In)						
0.40...0.63A	8.8	~	~	~	~	**CLE-709✱10-DA63B**
0.63...1.0A	14	~	~	1/2	1/2	**CLE-709✱10-DB10B**
1.0...1.6A	22	~	~	3/4	3/4	**CLE-709✱10-DB16B**
1.6...2.5A	35	1/2	1/2	1	1-1/2	**CLE-709✱10-DB25B**
2.5...4.0A	56	3/4	3/4	2	3	**CLE-709✱10-DB40B**
4.0...6.3A	88	1	1-1/2	3	5	**CLE-709✱10-DB63B**
6.3...10A	140	2	2	5	7-1/2	**CLE-709✱10-DC10B**
6.3...10A	140	2	2	5	7-1/2	**CLE-712✱10-DC10B**
10...16A	224	3	5	10	10	**CLE-716✱10-DC16B**
14.5...20A	280	5	5	10	15 ❹	**CLE-723✱10-DC20B**
18...25A	350	5	7-1/2	15	20 ❹	**CLE-723✱10-DC25B**
23...29A	406	7-1/2	10	20	25 ❹	**CLE-730✱10-DC29B**
26.5...32A	448	7-1/2	10	20	30 ❹	**CLE-730✱10-DC32B**
30...36A	432	10	10	25	30 ❹	**CLE-737✱10-DC36B**
34...40A	480	10	10	25	30 ❹	**CLE-737✱10-DC40B**
KTA7-45H – High Interrupting Capacity (13 x In)						
6.3...10A	130	2	3	5	7-1/2	**CLE-730✱10-FC10B-W ❷**
10...16A	208	3	5	10	10	**CLE-730✱10-FC16B-W ❷**
14.5...20A	260	5	5	10	15	**CLE-730✱10-FC20B-W ❷**
18...25A	325	7-1/2	7-1/2	15	20	**CLE-730✱10-FC25B-W ❷**
23...32A	416	7-1/2	10	20	25	**CLE-730✱10-FC32B-W ❷**
32...45A	585	10	10	25	30	**CLE-737✱10-FC45B-W ❷**
32...45A	585	10	15	30	30	**CLE-743✱11-FC45C-W ❷ ❸**

For applications above 45 amps please consider open type combination starters in Section C.

Includes:

- KT9 Motor Controller with 1 NO Auxiliary Contact
- CA7 Contactor (AC)
- Connecting Module (Cat.# KT9-32S or 40H-PEC23)
- Terminal Adaptor for Type E/F Applications
- Can mount on one DIN-rail

Optional: ❷

- Type W Mounting Module is optional on 32S & 40H. Type W Module is standard on C26 to C29 and 45H models. See modifications on page F3:16.

Coil Codes (✱) ❶

AC Coil Code	Voltage Range	
	50 Hz	60 Hz
024Z	24V	24V
0120	**110V**	**120V**
220W	**200-220V**	**208-240V**
230Z	230V	230V
0277	240V	277V
0415	400-415V	~
0480 ❻	**440V**	**480V**
0600 ❻	550V	600V

Horsepower ratings shown in the tables are for reference only.
The final selection of the controller depends on the actual motor full load current and service factor.

- *For motor with service factor less than 1.15.* Use motor nameplate full load current times 0.9 and choose the motor starter with the appropriate current range. Example: Motor F.L.C. = 4.2A; S.F. = 1.0. – 4.2A x 0.9 = 3.78A. Select Catalog Number KTA9-32S-4.0A.

Ordering Instructions

Specify Catalog Number	
Replace (✱) with Coil Code	**See Coil Code table on this page for codes.**

❶ Other voltages available, see Section A in this catalog.
❷ CLE-730...743 with KTA7-45H include Type W Mounting Modules for 35mm or 70mm DIN rail or Panel Mounting as necessary. To add Type W Mounting Modules for 32S models add **-W** to end of catalog number. See page F3:16 for modifications.
❸ CLE-743 supplied with (1) NO and (1) NC front mount auxiliary.
❹ Catalog numbers with specific voltages (i.e. @ 575V) shaded in gray are suitable for use as a manual motor starter only because they are not Type E rated. See ratings starting on page F3:17.

Non-Reversing Ecombo Starters with DC Coil, Series CA7 Contactor ❷

Thermal Trip [A]	Magnetic Trip [A]	Typical Three Phase [HP]				Catalog Number ❶
		200V	230V	460V	575V	
KTA9-32S - Standard Interrupting Capacity (14 x In)						
0.10...0.16A	2.2	~	~	~	~	**CLE-709✱E10-CA16B**
0.16...0.25A	3.5	~	~	~	~	**CLE-709✱E10-CA25B**
0.25...0.40A	5.6	~	~	~	~	**CLE-709✱E10-CA40B**
0.40...0.63A	8.8	~	~	~	~	**CLE-709✱E10-CA63B**
0.63...1.0A	14	~	~	1/2	1/2	**CLE-709✱E10-CB10B**
1.0...1.6A	22	~	~	3/4	3/4	**CLE-709✱E10-CB16B**
1.6...2.5A	35	1/2	1/2	1	1-1/2	**CLE-709✱E10-CB25B**
2.5...4.0A	56	3/4	3/4	2	3	**CLE-709✱E10-CB40B**
4.0...6.3A	88	1	1-1/2	3	5 ❹	**CLE-709✱E10-CB63B**
6.3...10A	140	2	2	5	7-1/2 ❹	**CLE-709✱E10-CC10B**
6.3...10A	140	3	3	7-1/2	7-1/2 ❹	**CLE-712✱E10-CC10B**
10...16A	224	3	5	10	10 ❹	**CLE-716✱E10-CC16B**
KTA9-40H – High Interrupting Capacity (14 x In)						
0.40...0.63A	8.8	~	~	~	~	**CLE-709✱E10-DA63B**
0.63...1.0A	14	~	~	1/2	1/2	**CLE-709✱E10-DB10B**
1.0...1.6A	22	~	~	3/4	3/4	**CLE-709✱E10-DB16B**
1.6...2.5A	35	1/2	1/2	1	1-1/2	**CLE-709✱E10-DB25B**
2.5...4.0A	56	3/4	3/4	2	3	**CLE-709✱E10-DB40B**
4.0...6.3A	88	1	1-1/2	3	5	**CLE-709✱E10-DB63B**
6.3...10A	140	2	2	5	7-1/2	**CLE-709✱E10-DC10B**
6.3...10A	140	2	2	5	7-1/2	**CLE-712✱E10-DC10B**
10...16A	224	3	5	10	10	**CLE-716✱E10-DC16B**
14.5...20A	280	5	5	10	15 ❹	**CLE-723✱E10-DC20B**
18...25A	350	5	7-1/2	15	20 ❹	**CLE-723✱E10-DC25B**
23...29A	406	7-1/2	10	20	25 ❹	**CLE-730✱E10-DC29B**
26.5...32A	448	7-1/2	10	20	30 ❹	**CLE-730✱E10-DC32B**
30...36A	432	10	10	25	30 ❹	**CLE-737✱E10-DC36B**
34...40A	480	10	10	25	30 ❹	**CLE-737✱E10-DC40B**
KTA7-45H – High Interrupting Capacity (13 x In)						
6.3...10A	130	2	3	5	7-1/2	**CLE-730✱E10-FC10B-W ❷**
10...16A	208	3	5	10	10	**CLE-730✱E10-FC16B-W ❷**
14.5...20A	260	5	5	10	15	**CLE-730✱E10-FC20B-W ❷**
18...25A	325	7-1/2	7-1/2	15	20	**CLE-730✱E10-FC25B-W ❷**
23...32A	416	7-1/2	10	20	25	**CLE-730✱E10-FC32B-W ❷**
32...45A	585	10	10	25	30	**CLE-737✱E10-FC45B-W ❷**
32...45A	585	10	15	30	30	**CLE-743✱E11-FC45C-W ❷ ❸**

For applications above 45 amps please consider open type combination starters in Section C.

Includes:

- KT9 Motor Controller with 1 NO Auxiliary Contact
- CA7 Contactor (DC)
- Connecting Module (Cat.# KT9-32S or 40H-PEC23)
- Terminal Adaptor for Type E/F Applications
- Can mount on one DIN-rail

Optional: ❷

- Type W Mounting Module is optional on 32S & 40H. Type W Module is standard on C26 to C29 and 45H models. See modifications on page F3:16.

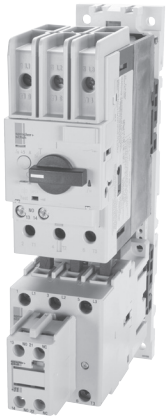

Coil Codes (✱) ❶

DC Coil Codes	Voltage
012	**12V**
024	**24V**
036	36-48V
048	48-72V
110	110-125V
220	220-250V

Horsepower ratings shown in the tables are for reference only. *The final selection of the controller depends on the actual motor full load current and service factor.*

- *For motor with service factor less than 1.15.* Use motor name-plate full load current times 0.9 and choose the motor starter with the appropriate current range. Example: Motor F.L.C. = 4.2A; S.F. = 1.0. – 4.2A x 0.9 = 3.78A.
  Select Catalog Number KTA9-32S-4.0A.

Ordering Instructions

Specify Catalog Number	
Replace (✱) with Coil Code	**See Coil Code table on this page for codes.**

❶ Other voltages available, see Section A in this catalog.
❷ CLE-730...743 with KTA7-45H include Type W Mounting Modules for 35mm or 70mm DIN rail or Panel Mounting as necessary. To add Type W Mounting Modules for 32S models add **-W** to end of catalog number. See page F3:16 for modifications.
❸ CLE-743 supplied with (1) NO and (1) NC front mount auxiliary.
❹ Catalog numbers with specific voltages (i.e. @ 575V) shaded in gray are suitable for use as a manual motor starter only because they are not Type E rated. See ratings starting on page F3:17.

Reversing Ecombo Starters with AC Coil, Series CA7 Contactor ❷

Thermal Trip [A]	Magnetic Trip [A]	Typical Three Phase [HP]				Catalog Number ❶
		200V	230V	460V	575V	
KTA9-32S - Standard Interrupting Capacity (14 x In)						
0.10...0.16A	2.2	~	~	~	~	**CLUE-709✱22-CA16B**
0.16...0.25A	3.5	~	~	~	~	**CLUE-709✱22-CA25B**
0.25...0.40A	5.6	~	~	~	~	**CLUE-709✱22-CA40B**
0.40...0.63A	8.8	~	~	~	~	**CLUE-709✱22-CA63B**
0.63...1.0A	14	~	~	1/2	1/2	**CLUE-709✱22-CB10B**
1.0...1.6A	22	~	~	3/4	3/4	**CLUE-709✱22-CB16B**
1.6...2.5A	35	1/2	1/2	1	1-1/2	**CLUE-709✱22-CB25B**
2.5...4.0A	56	3/4	3/4	2	3	**CLUE-709✱22-CB40B**
4.0...6.3A	88	1	1-1/2	3	5 ❹	**CLUE-709✱22-CB63B**
6.3...10A	140	2	2	5	7-1/2 ❹	**CLUE-709✱22-CC10B**
6.3...10A	140	3	3	7-1/2	7-1/2 ❹	**CLUE-712✱22-CC10B**
10...16A	224	3	5	10	10 ❹	**CLUE-716✱22-CC16B**
KTA9-40H – High Interrupting Capacity (14 x In)						
0.40...0.63A	8.8	~	~	~	~	**CLUE-709✱22-DA63B**
0.63...1.0A	14	~	~	1/2	1/2	**CLUE-709✱22-DB10B**
1.0...1.6A	22	~	~	3/4	3/4	**CLUE-709✱22-DB16B**
1.6...2.5A	35	1/2	1/2	1	1-1/2	**CLUE-709✱22-DB25B**
2.5...4.0A	56	3/4	3/4	2	3	**CLUE-709✱22-DB40B**
4.0...6.3A	88	1	1-1/2	3	5	**CLUE-709✱22-DB63B**
6.3...10A	140	2	2	5	7-1/2	**CLUE-709✱22-DC10B**
6.3...10A	140	2	2	5	7-1/2	**CLUE-712✱22-DC10B**
10...16A	224	3	5	10	10	**CLUE-716✱22-DC16B**
14.5...20A	280	5	5	10	15 ❹	**CLUE-723✱22-DC20B**
18...25A	350	5	7-1/2	15	20 ❹	**CLUE-723✱22-DC25B**
23...29A	406	7-1/2	10	20	25 ❹	**CLUE-730✱22-DC29B ❷**
26.5...32A	448	7-1/2	10	20	30 ❹	**CLUE-730✱22-DC32B ❷**
30...36A	432	10	10	25	30 ❹	**CLUE-737✱22-DC36B ❷**
34...40A	480	10	10	25	30 ❹	**CLUE-737✱22-DC40B ❷**
KTA7-45H – High Interrupting Capacity (13 x In)						
6.3...10A	130	2	3	5	7.5	**CLUE-730✱22-FC10B-W ❷**
10...16A	208	3	5	10	10	**CLUE-730✱22-FC16B-W ❷**
14.5...20A	260	5	5	10	15	**CLUE-730✱22-FC20B-W ❷**
18...25A	325	7.5	7.5	15	20	**CLUE-730✱22-FC25B-W ❷**
23...32A	416	7.5	10	20	25	**CLUE-730✱22-FC32B-W ❷**
32...45A	585	10	10	25	30	**CLUE-737✱22-FC45B-W ❷**
32...45A	585	10	15	30	30	**CLUE-743✱22-FC45C-W ❷❸**

For applications above 45 amps please consider open type combination starters in Section C.

Includes:

- KT9 Motor Controller with 1 NO Auxiliary Contact
- Two CA7 Contactors (AC)
- Connecting Module (Cat.# KT9-32S or 40H-PEC23)
- Terminal Adaptor for Type E/F Applications
- Reversing Power Wiring Kit (Cat.# CAUT7-PW23)
- Electrical / Mechanical Interlock
- Can mount on one DIN-rail

Optional: ❷

- Type W Mounting Module is optional on 32S & 40H. Type W Module is standard on C29... C40 and 45H models. See modifications on page F3:16.

Coil Codes (✱) ❶

AC Coil Code	Voltage Range 50 Hz	Voltage Range 60 Hz
024Z	24V	24V
0120	**110V**	**120V**
220W	**200-220V**	**208-240V**
230Z	230V	230V
0277	240V	277V
0415	400-415V	~
0480 ❻	**440V**	**480V**
0600 ❻	550V	600V

Horsepower ratings shown in the tables are for reference only. *The final selection of the controller depends on the actual motor full load current and service factor.*

- *For motor with service factor less than 1.15.* Use motor nameplate full load current times 0.9 and choose the motor starter with the appropriate current range. Example: Motor F.L.C. = 4.2A; S.F. = 1.0. – 4.2A x 0.9 = 3.78A. Select Catalog Number KTA9-32S-4.0A.

Ordering Instructions

Specify Catalog Number	
Replace (✱) with Coil Code	**See Coil Code table on this page for codes.**

❶ Other voltages available, see Section A in this catalog.
❷ CLUE-730...743 with KTA9-40H and KTA7-45H include Type W Mounting Modules for 35mm or 70mm DIN rail or Panel Mounting as necessary from page F1:17.
❸ CLUE-743 supplied with (1) NO and (1) NC front mount auxiliary per contactor.
❹ Catalog numbers with specific voltages (i.e. @ 575V) shaded in gray are suitable for use as a manual motor starter only because they are not Type E rated. See ratings starting on page F3:17.

Reversing Ecombo Starters with DC Coil, Series CA7 Contactor ❷

Thermal Trip [A]	Magnetic Trip [A]	Typical Three Phase [HP]				Catalog Number ❶
		200V	230V	460V	575V	
KTA9-32S - Standard Interrupting Capacity (14 x In)						
0.10...0.16A	2.2	~	~	~	~	**CLUE-709✱E22-CA16B**
0.16...0.25A	3.5	~	~	~	~	**CLUE-709✱E22-CA25B**
0.25...0.40A	5.6	~	~	~	~	**CLUE-709✱E22-CA40B**
0.40...0.63A	8.8	~	~	~	~	**CLUE-709✱E22-CA63B**
0.63...1.0A	14	~	~	1/2	1/2	**CLUE-709✱E22-CB10B**
1.0...1.6A	22	~	~	3/4	3/4	**CLUE-709✱E22-CB16B**
1.6...2.5A	35	1/2	1/2	1	1-1/2	**CLUE-709✱E22-CB25B**
2.5...4.0A	56	3/4	3/4	2	3	**CLUE-709✱E22-CB40B**
4.0...6.3A	88	1	1-1/2	3	5 ❹	**CLUE-709✱E22-CB63B**
6.3...10A	140	2	2	5	7-1/2 ❹	**CLUE-709✱E22-CC10B**
6.3...10A	140	3	3	7-1/2	7-1/2 ❹	**CLUE-712✱E22-CC10B**
10...16A	224	3	5	10	10 ❹	**CLUE-716✱E22-CC16B**
KTA9-40H – High Interrupting Capacity (14 x In)						
0.40...0.63A	8.8	~	~	~	~	**CLUE-709✱E22-DA63B**
0.63...1.0A	14	~	~	1/2	1/2	**CLUE-709✱E22-DB10B**
1.0...1.6A	22	~	~	3/4	3/4	**CLUE-709✱E22-DB16B**
1.6...2.5A	35	1/2	1/2	1	1-1/2	**CLUE-709✱E22-DB25B**
2.5...4.0A	56	3/4	3/4	2	3	**CLUE-709✱E22-DB40B**
4.0...6.3A	88	1	1-1/2	3	5	**CLUE-709✱E22-DB63B**
6.3...10A	140	2	2	5	7-1/2	**CLUE-709✱E22-DC10B**
6.3...10A	140	2	2	5	7-1/2	**CLUE-712✱E22-DC10B**
10...16A	224	3	5	10	10	**CLUE-716✱E22-DC16B**
14.5...20A	280	5	5	10	15 ❹	**CLUE-723✱E22-DC20B**
18...25A	350	5	7-1/2	15	20 ❹	**CLUE-723✱E22-DC25B**
23...29A	406	7-1/2	10	20	25 ❹	**CLUE-730✱E22-DC29B ❷**
26.5...32A	448	7-1/2	10	20	30 ❹	**CLUE-730✱E22-DC32B ❷**
30...36A	432	10	10	25	30 ❹	**CLUE-737✱E22-DC36B ❷**
34...40A	480	10	10	25	30 ❹	**CLUE-737✱E22-DC40B ❷**
KTA7-45H – High Interrupting Capacity (13 x In)						
6.3...10A	130	2	3	5	7.5	**CLUE-730✱E22-FC10B-W ❷**
10...16A	208	3	5	10	10	**CLUE-730✱E22-FC16B-W ❷**
14.5...20A	260	5	5	10	15	**CLUE-730✱E22-FC20B-W ❷**
18...25A	325	7.5	7.5	15	20	**CLUE-730✱E22-FC25B-W ❷**
23...32A	416	7.5	10	20	25	**CLUE-730✱E22-FC32B-W ❷**
32...45A	585	10	10	25	30	**CLUE-737✱E22-FC45B-W ❷**
32...45A	585	10	15	30	30	**CLUE-743✱E22-FC45C-W ❷❸**

For applications above 45 amps please consider open type combination starters in Section C.

Includes:

- KT9 Motor Controller with 1 NO Auxiliary Contact
- Two CA7 Contactors (DC)
- Connecting Module (Cat.# KT9-32S or 40H-PEC23)
- Terminal Adaptor for Type E/F Applications
- Reversing Power Wiring Kit (Cat.# CAUT7-PW23)
- Electrical / Mechanical Interlock
- Can mount on one DIN-rail

Optional: ❷

- Type W Mounting Module is optional on 32S & 40H. Type W Module is standard on C29... C40 and 45H models. See modifications on page F3:16.

Coil Codes (✱) ❶

DC Coil Codes	Voltage
012	**12V**
024	**24V**
036	36-48V
048	48-72V
110	110-125V
220	220-250V

Horsepower ratings shown in the tables are for reference only. *The final selection of the controller depends on the actual motor full load current and service factor.*

- *For motor with service factor less than 1.15.* Use motor nameplate full load current times 0.9 and choose the motor starter with the appropriate current range. Example: Motor F.L.C. = 4.2A; S.F. = 1.0. – 4.2A x 0.9 = 3.78A. Select Catalog Number KTA9-32S-4.0A.

Ordering Instructions

Specify Catalog Number	
Replace (✱) with Coil Code	**See Coil Code table on this page for codes.**

❶ Other voltages available, see Section A in this catalog.
❷ CLUE-730...743 with KTA9-40H and KTA7-45H include Type W Mounting Modules for 35mm or 70mm DIN rail or Panel Mounting as necessary from page F1:17.
❸ CLUE-743 supplied with (1) NO and (1) NC front mount auxiliary per contactor.
❹ Catalog numbers with specific voltages (i.e. @ 575V) shaded in gray are suitable for use as a manual motor starter only because they are not Type E rated. See ratings starting on page F3:17.

Non-Reversing EcomboPlus Starters with AC Coil, Series CA7 Contactor ❷

Thermal Trip [A]	Magnetic Trip [A]	Typical Three Phase [HP]				Catalog Number ❶
		200V	230V	460V	575V	
KTA9-32S - Standard Interrupting Capacity (14 x In)						
0.10...0.16A	2.2	~	~	~	~	CLS-709✱10-CA16B
0.16...0.25A	3.5	~	~	~	~	CLS-709✱10-CA25B
0.25...0.40A	5.6	~	~	~	~	CLS-709✱10-CA40B
0.40...0.63A	8.8	~	~	~	~	CLS-709✱10-CA63B
0.63...1.0A	14	~	~	1/2	1/2	CLS-709✱10-CB10B
1.0...1.6A	22	~	~	3/4	3/4	CLS-709✱10-CB16B
1.6...2.5A	35	1/2	1/2	1	1-1/2	CLS-709✱10-CB25B
2.5...4.0A	56	3/4	3/4	2	3	CLS-709✱10-CB40B
4.0...6.3A	88	1	1-1/2	3	5 ❸	CLS-709✱10-CB63B
6.3...10A	140	2	2	5	7-1/2 ❸	CLS-709✱10-CC10B
6.3...10A	140	3	3	7-1/2	7-1/2 ❸	CLS-712✱10-CC10B
10...16A	224	3	5	10	10 ❸	CLS-716✱10-CC16B
KTA9-40H – High Interrupting Capacity (14 x In)						
0.40...0.63A	8.8	~	~	~	~	CLS-709✱10-DA63B
0.63...1.0A	14	~	~	1/2	1/2	CLS-709[illegible]B10B
1.0...1.6A	22	~	~	3/4	3/4	CLS-70[illegible]16B
1.6...2.5A	35	1/2	1/2	1	1-1/2	CLS-709[illegible]25B
2.5...4.0A	56	3/4	3/4	2	[illegible]	[illegible]✱10-DB40B
4.0...6.3A	88	1	1-1/2	[illegible]	[illegible]	[illegible]709✱10-DB63B
6.3...10A	140	2	2	[illegible]	[illegible]	CLS-709✱10-DC10B
6.3...10A	140	2	[illegible]	[illegible]	[illegible]-1/2	CLS-712✱10-DC10B
10...16A	224	[illegible]	[illegible]	[illegible]	10	CLS-716✱10-DC16B
14.5...20A	280	[illegible]	[illegible]	10	15 ❸	CLS-723✱10-DC20B
18...25A	350	[illegible]	7-1/2	15	20 ❸	CLS-723✱10-DC25B
23...29A	406	[illegible]	10	20	25 ❸	CLS-730✱10-DC29B ❷
26.5...32A	448	7-1/2	10	20	30 ❸	CLS-730✱10-DC32B ❷
30...36A	432	10	10	25	30 ❸	CLS-737✱10-DC36B ❷
34...40A	480	10	10	25	30 ❸	CLS-737✱10-DC40B ❷

For applications above 40 amps please consider open type combination starters in Section C.

Includes:

- KT9 Motor Controller with 1 NO Auxiliary Contact
- CA7 Contactor (AC)
- Connecting Module (Cat.# KT9-32S or 40H-PEC23)
- Terminal Adaptor for Type E/F Applications
- Can mount on or DIN-rail

COMING SOON!

Optional: ❷

- Type W Mounting Module is optional on 32S & 40H. Type W Module is standard on DC29...DC40 models. See modifications on page F3:16.

Coil Codes (✱) ❶

AC Coil Code	Voltage Range	
	50 Hz	60 Hz
024Z	24V	24V
0120	110V	120V
220W	200-220V	208-240V
230Z	230V	230V
0277	240V	277V
0415	400-415V	~
0480 ❻	440V	480V
0600 ❻	550V	600V

Horsepower ratings shown in the tables are for reference only. *The final selection of the controller depends on the actual motor full load current and service factor.*

- *For motor with service factor less than 1.15.* Use motor nameplate full load current times 0.9 and choose the motor starter with the appropriate current range. Example: Motor F.L.C. = 4.2A; S.F. = 1.0. – 4.2A x 0.9 = 3.78A. Select Catalog Number KTA9-32S-4.0A.

Ordering Instructions

Specify Catalog Number	
Replace (✱) with Coil Code	See Coil Code table on this page for codes.

❶ Other voltages available, see Section A in this catalog.
❷ CLS-730...737 include Type W Mounting Modules for 35mm or 70mm DIN rail or Panel Mounting as necessary. To add Type W Mounting Modules to other units see page F3:16 for modifications.
❸ Catalog numbers with specific voltages (i.e. @ 575V) shaded in gray are suitable for use as a manual motor starter only because they are not Type E rated. See ratings starting on page F3:17.

Non-Reversing EcomboPlus Starters with DC Coil, Series CA7 Contactor ❷

Thermal Trip [A]	Magnetic Trip [A]	Typical Three Phase [HP]				Catalog Number ❶
		200V	230V	460V	575V	
KTA9-32S - Standard Interrupting Capacity (14 x In)						
0.10...0.16A	2.2	~	~	~	~	CLS-709✱E10-CA16B
0.16...0.25A	3.5	~	~	~	~	CLS-709✱E10-CA25B
0.25...0.40A	5.6	~	~	~	~	CLS-709✱E10-CA40B
0.40...0.63A	8.8	~	~	~	~	CLS-709✱E10-CA63B
0.63...1.0A	14	~	~	1/2	1/2	CLS-709✱E10-CB10B
1.0...1.6A	22	~	~	3/4	3/4	CLS-709✱E10-CB16B
1.6...2.5A	35	1/2	1/2	1	1-1/2	CLS-709✱E10-CB25B
2.5...4.0A	56	3/4	3/4	2	3	CLS-709✱E10-CB40B
4.0...6.3A	88	1	1-1/2	3	5 ❸	CLS-709✱E10-CB63B
6.3...10A	140	2	2	5	7-1/2 ❸	CLS-709✱E10-CC10B
6.3...10A	140	3	3	7-1/2	7-1/2 ❸	CLS-712✱E10-CC10B
10...16A	224	3	5	10	10 ❸	CLS-716✱E10-CC16B
KTA9-40H – High Interrupting Capacity (14 x In)						
0.40...0.63A	8.8	~	~	~	~	CLS-709✱E10-DA63B
0.63...1.0A	14	~	~	1/2	1/2	CLS-709✱E10-DB10B
1.0...1.6A	22	~	~	3/4	3/4	CLS-709✱E10-DB16B
1.6...2.5A	35	1/2	1/2	1	1-1/2	CLS-709✱E10-DB25B
2.5...4.0A	56	3/4	3/4	2	[illegible]	CLS-709✱E10-DB40B
4.0...6.3A	88	1	1-1/2	[illegible]	[illegible]	CLS-709✱E10-DB63B
6.3...10A	140	2	2	[illegible]	[illegible]	CLS-709✱E10-DC10B
6.3...10A	140	2	[illegible]	[illegible]	7-1/2	CLS-712✱E10-DC10B
10...16A	224	[illegible]	[illegible]	[illegible]	10	CLS-716✱E10-DC16B
14.5...20A	280	[illegible]	[illegible]	10	15 ❸	CLS-723✱E10-DC20B
18...25A	350	[illegible]	7-1/2	15	20 ❸	CLS-723✱E10-DC25B
23...29A	406	[illegible]	10	20	25 ❸	CLS-730✱E10-DC29B ❷
26.5...32A	448	7-1/2	10	20	30 ❸	CLS-730✱E10-DC32B ❷
30...36A	432	10	10	25	30 ❸	CLS-737✱E10-DC36B ❷
34...40A	480	10	10	25	30 ❸	CLS-737✱E10-DC40B ❷

For applications above 40 amps please consider open type combination starters in Section C.

Includes:

- KT9 Motor Controller with 1 NO Auxiliary Contact
- CA7 Contactor (DC)
- Connecting Module (Cat.# KT9-32S or 40H-PEC23)
- Terminal Adaptor for Type E/F Applications
- Can mount on [illegible] DIN-rail

Optional: ❷

- Type W Mounting Module is optional on 32S & 40H. Type W Module is standard on DC29... D40 models. See modifications on page F3:16.

COMING SOON!

Coil Codes (✱) ❶

DC Coil Codes	Voltage
012	12V
024	24V
036	36-48V
048	48-72V
110	110-125V
220	220-250V

Horsepower ratings shown in the tables are for reference only.
The final selection of the controller depends on the actual motor full load current and service factor.

- *For motor with service factor less than 1.15.* Use motor nameplate full load current times 0.9 and choose the motor starter with the appropriate current range. Example: Motor F.L.C. = 4.2A; S.F. = 1.0. – 4.2A x 0.9 = 3.78A. Select Catalog Number KTA9-32S-4.0A.

Ordering Instructions

Specify Catalog Number	
Replace (✱) with Coil Code	See Coil Code table on this page for codes.

❶ Other voltages available, see Section A in this catalog.
❷ CLS-730...737 include Type W Mounting Modules for 35mm or 70mm DIN rail or Panel Mounting as necessary. To add Type W Mounting Modules to other units see page F3:16 for modifications.
❸ Catalog numbers with specific voltages (i.e. @ 575V) shaded in gray are suitable for use as a manual motor starter only because they are not Type E rated. See ratings starting on page F3:17.

Reversing EcomboPlus Starters with AC Coil, Series CA7 Contactor ❷

Thermal Trip [A]	Magnetic Trip [A]	Typical Three Phase [HP]				Catalog Number ❶
		200V	230V	460V	575V	
KTA9-32S - Standard Interrupting Capacity (14 x In)						
0.10...0.16A	2.2	~	~	~	~	CLUS-709∗22-CA16B
0.16...0.25A	3.5	~	~	~	~	CLUS-709∗22-CA25B
0.25...0.40A	5.6	~	~	~	~	CLUS-709∗22-CA40B
0.40...0.63A	8.8	~	~	~	~	CLUS-709∗22-CA63B
0.63...1.0A	14	~	~	1/2	1/2	CLUS-709∗22-CB10B
1.0...1.6A	22	~	~	3/4	3/4	CLUS-709∗22-CB16B
1.6...2.5A	35	1/2	1/2	1	1-1/2	CLUS-709∗22-CB25B
2.5...4.0A	56	3/4	3/4	2	3	CLUS-709∗22-CB40B
4.0...6.3A	88	1	1-1/2	3	5 ❸	CLUS-709∗22-CB63B
6.3...10A	140	2	2	5	7-1/2 ❸	CLUS-709∗22-CC10B
6.3...10A	140	3	3	7-1/2	7-1/2 ❸	CLUS-712∗22-CC10B
10...16A	224	3	5	10	10 ❸	CLUS-716∗22-CC16B
KTA9-40H – High Interrupting Capacity (14 x In)						
0.40...0.63A	8.8	~	~	~	~	CLUS-709∗22-DA63B
0.63...1.0A	14	~	~	1/2	1/2	CLUS-709∗22-DB10B
1.0...1.6A	22	~	~	3/4	3/4	CLUS-709∗22-DB16B
1.6...2.5A	35	1/2	1/2	1	1/2	CLUS-709∗22-DB25B
2.5...4.0A	56	3/4	3/4	2	[illegible]	CLUS-709∗22-DB40B
4.0...6.3A	88	1	1-1/2	[illegible]	[illegible]	CLUS-709∗22-DB63B
6.3...10A	140	2	[illegible]	[illegible]	1/2	CLUS-709∗22-DC10B
6.3...10A	140	2	[illegible]	[illegible]	7-1/2	CLUS-712∗22-DC10B
10...16A	224	[illegible]	[illegible]	10	10	CLUS-716∗22-DC16B
14.5...20A	280	[illegible]	[illegible]	10	15 ❸	CLUS-723∗22-DC20B
18...25A	350	[illegible]	7-1/2	15	20 ❸	CLUS-723∗22-DC25B
23...29A	406	7-1/2	10	20	25 ❸	CLUS-730∗22-DC29B ❷
26.5...32A	448	7-1/2	10	20	30 ❸	CLUS-730∗22-DC32B ❷
30...36A	432	10	10	25	30 ❸	CLUS-737∗22-DC36B ❷
34...40A	480	10	10	25	30 ❸	CLUS-737∗22-DC40B ❷

For applications above 40 amps please consider open type combination starters in Section C.

COMING SOON!

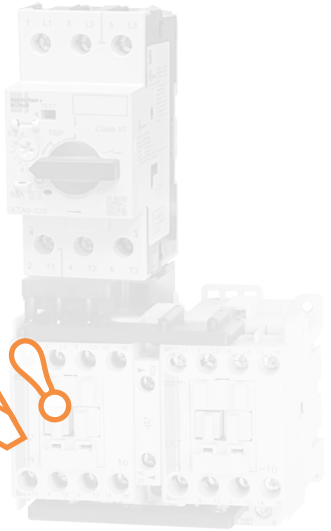

Includes:

- KT9 Motor Controller with 1 NO Auxiliary Contact
- Two CA7 Contactors (DC)
- Connecting Module (Cat.# KT9-32S or 40H-PEC23)
- Terminal Adaptor for Type E/F Applications
- Reversing Power Wiring Kit (Cat.# CAUT7-PW23)
- Electrical / Mechanical Interlock
- Can mount on one DIN-rail

Optional: ❷

- Type W Mounting Module is optional on 32S & 40H. Type W Module is standard on DC29...DC40 models. See modifications on page F3:16.

Coil Codes (∗) ❶

AC Coil Code	Voltage Range 50 Hz	Voltage Range 60 Hz
024Z	24V	24V
0120	110V	120V
220W	200-220V	208-240V
230Z	230V	230V
0277	240V	277V
0415	400-415V	~
0480 ⓪	440V	480V
0600 ⓪	550V	600V

Horsepower ratings shown in the tables are for reference only. *The final selection of the controller depends on the actual motor full load current and service factor.*

- *For motor with service factor less than 1.15.* Use motor nameplate full load current times 0.9 and choose the motor starter with the appropriate current range. Example: Motor F.L.C. = 4.2A; S.F. = 1.0. – 4.2A x 0.9 = 3.78A. Select Catalog Number KTA9-32S-4.0A.

Ordering Instructions

Specify Catalog Number	
Replace (∗) with Coil Code	See Coil Code table on this page for codes.

❶ Other voltages available, see Section A in this catalog.
❷ CLUS-730...737 include Type W Mounting Modules for 35mm or 70mm DIN rail or Panel Mounting as necessary. To add Type W Mounting Modules to other units see page F3:16 for modifications.
❸ Catalog numbers with specific voltages (i.e. @ 575V) shaded in gray are suitable for use as a manual motor starter only because they are not Type E rated. See ratings starting on page F3:17.

Reversing EcomboPlus Starters with DC Coil, Series CA7 Contactor ❷

Thermal Trip [A]	Magnetic Trip [A]	Typical Three Phase [HP]				Catalog Number ❶
		200V	230V	460V	575V	
KTA9-32S - Standard Interrupting Capacity (14 x In)						
0.10...0.16A	2.2	~	~	~	~	CLUS-709✱E22-CA16B
0.16...0.25A	3.5	~	~	~	~	CLUS-709✱E22-CA25B
0.25...0.40A	5.6	~	~	~	~	CLUS-709✱E22-CA40B
0.40...0.63A	8.8	~	~	~	~	CLUS-709✱E22-CA63B
0.63...1.0A	14	~	~	1/2	1/2	CLUS-709✱E22-CB10B
1.0...1.6A	22	~	~	3/4	3/4	CLUS-709✱E22-CB16B
1.6...2.5A	35	1/2	1/2	1	1-1/2	CLUS-709✱E22-CB25B
2.5...4.0A	56	3/4	3/4	2	3	CLUS-709✱E22-CB40B
4.0...6.3A	88	1	1-1/2	3	5 ❸	CLUS-709✱E22-CB63B
6.3...10A	140	2	2	5	7-1/2 ❸	CLUS-709✱E22-CC10B
6.3...10A	140	3	3	7-1/2	7-1/2 ❸	CLUS-712✱E22-CC10B
10...16A	224	3	5	10	10 ❸	CLUS-716✱E22-CC16B
KTA9-40H – High Interrupting Capacity (14 x In)						
0.40...0.63A	8.8	~	~	~	~	CLUS-709✱E22-DA63B
0.63...1.0A	14	~	~	1/2	1/2	CLUS-709✱E22-DB10B
1.0...1.6A	22	~	~	3/4	3/4	CLUS-709✱E22-DB16B
1.6...2.5A	35	1/2	1/2	1	1/2	CLUS-709✱E22-DB25B
2.5...4.0A	56	3/4	3/4	[illegible]	[illegible]	CLUS-709✱E22-DB40B
4.0...6.3A	88	1	1-1/2	[illegible]	[illegible]	CLUS-709✱E22-DB63B
6.3...10A	140	2	[illegible]	[illegible]	7-1/2	CLUS-709✱E22-DC10B
6.3...10A	140	2	[illegible]	[illegible]	7-1/2	CLUS-712✱E22-DC10B
10...16A	224	[illegible]	[illegible]	10	10	CLUS-716✱E22-DC16B
14.5...20A	280	[illegible]	[illegible]	10	15 ❸	CLUS-723✱E22-DC20B
18...25A	350	[illegible]	7-1/2	15	20 ❸	CLUS-723✱E22-DC25B
23...29A	406	7-1/2	10	20	25 ❸	CLUS-730✱E22-DC29B ❷
26.5...32A	448	7-1/2	10	20	30 ❸	CLUS-730✱E22-DC32B ❷
30...36A	432	10	10	25	30 ❸	CLUS-737✱E22-DC36B ❷
34...40A	480	10	10	25	30 ❸	CLUS-737✱E22-DC40B ❷

For applications above 40 amps please consider open type combination starters in Section C.

COMING SOON!

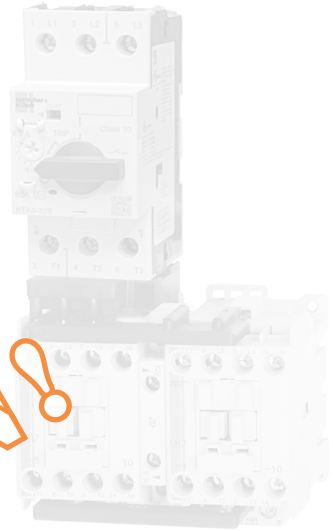

Includes:

- KT9 Motor Controller with 1 NO Auxiliary Contact
- Two CA7 Contactors (DC)
- Connecting Module (Cat.# KT9-32S or 40H-PEC23)
- Terminal Adaptor for Type E/F Applications
- Reversing Power Wiring Kit (Cat.# CAUT7-PW23)
- Electrical / Mechanical Interlock
- Can mount on one DIN-rail

Optional: ❷

- Type W Mounting Module is optional on 32S & 40H. Type W Module is standard on DC29...DC40 models. See modifications on page F3:16.

Coil Codes (✱) ❶

DC Coil Codes	Voltage
012	12V
024	24V
036	36-48V
048	48-72V
110	110-125V
220	220-250V

Horsepower ratings shown in the tables are for reference only. *The final selection of the controller depends on the actual motor full load current and service factor.*

- *For motor with service factor less than 1.15.* Use motor nameplate full load current times 0.9 and choose the motor starter with the appropriate current range. Example: Motor F.L.C. = 4.2A; S.F. = 1.0. – 4.2A x 0.9 = 3.78A. Select Catalog Number KTA9-32S-4.0A.

Ordering Instructions

Specify Catalog Number	
Replace (✱) with Coil Code	**See Coil Code table on this page for codes.**

❶ Other voltages available, see Section A in this catalog.
❷ CLUS-730...737 include Type W Mounting Modules for 35mm or 70mm DIN rail or Panel Mounting as necessary. To add Type W Mounting Modules to other units see page F3:16 for modifications.
❸ Catalog numbers with specific voltages (i.e. @ 575V) shaded in gray are suitable for use as a manual motor starter only because they are not Type E rated. See ratings starting on page F3:17.

Non-Reversing 3-Component Ecombo Starters ❷❸

Rated Oper. Current [A] ❹	Overload Adj. Range [A]	Magnetic Trip [A]	Typical Three Phase [HP]				Catalog Number ❶
			200V	230V	460V	575V	
KTB9-40H – High Interrupting Capacity (14 x In)							
0.63	0.1...0.5	8.8	~	~	~	~	**CLE-709✱10-DA63B-FBB**
1.0	1.0...5.0	14	~	~	1/2	1/2	**CLE-709✱10-DB10B-FCB**
1.6	1.0...5.0	22	~	~	3/4	3/4	**CLE-709✱10-DB16B-FCB**
2.5	1.0...5.0	35	1/2	1/2	1	1-1/2	**CLE-709✱10-DB25B-FCB**
4.0	1.0...5.0	56	3/4	3/4	2	3	**CLE-709✱10-DB40B-FCB**
6.3	3.2...16	88	1	1-1/2	3	5	**CLE-709✱10-DB63B-FDB**
10	3.2...16	140	2	2	5	7-1/2	**CLE-709✱10-DC10B-FDB**
16	3.2...16	224	3	3	7-1/2	10	**CLE-712✱10-DC16B-FDB**
16	3.2...16	224	3	5	10	10	**CLE-716✱10-DC16B-FDB**
20	5.4...27	280	5	5	10	~	**CLE-723✱10-DC20B-FEB**
25	5.4...27	350	5	7-1/2	15	~	**CLE-723✱10-DC25B-FEB**
29	11...55	406	7-1/2	10	20	~	**CLE-730✱10-DC29B-FFD**
32	11...55	448	7-1/2	10	20	~	**CLE-730✱10-DC32B-FFD**
KTB7-45H – High Interrupting Capacity (13 x In)							
25	5.4...27	325	5	7-1/2	15	20	**CLE-730✱10-FC25B-FED**
32	11...55	416	7-1/2	10	20	25	**CLE-730✱10-FC32B-FFD**
32	11...55	416	7-1/2	10	20	25	**CLE-737✱10-FC32B-FFD**
45	11...55	585	10	10	25	30	**CLE-737✱10-FC45B-FFD**
45	11...55	585	10	15	30	~	**CLE-743✱11-FC45C-FFD**

Includes:

- KTB9 Motor Controller
- CA7 Contactor (AC)
- CEP7 Solid State Overload Relay
- KT9 Connectors
- Terminal Adaptor for Type E Applications
- Mounting Modules for 40H or 45H Frame Units as required from page F1.17
- See page F3:16 for Factory Options

Coil Codes (✱)

AC Coil Code	Voltage Range	
	50 Hz	60 Hz
024Z	24V	24V
0120	**110V**	**120V**
220W	**200-220V**	**208-240V**
230Z	230V	230V
0277	240V	277V
0415	400-415V	~
0480 ❺	**440V**	**480V**
0600 ❺	550V	600V

❶ **Other voltages available, see Section A in this catalog.**

❷ All CLE are supplied with Auxiliary Contacts for customer use as follows;
CLE-709...723 (1) NO Internal Mount
CLE-730...737 (1) NO Side Mount
CLE-743 (1) NO & (1) NC Front Mount
All KTB9s are supplied with (1) NO auxiliary contact, which should be used in series with the NC contact on the overload (95-96).

❸ Horsepower ratings shown in tables are for reference only. ***The final selection of the controller and solid state overload relay depends on the actual motor full load current and service factor.***

❹ The KTB9 Motor Circuit Controller is designed and tested to protect a motor circuit in case of a shortcircuit. A separate Sprecher + Schuh CEP7-1EF overload relay with selectable trip class should be used to protect the motor against overload. In Applications with motor starting times exceeding 10 seconds (heavy duty starting) the rated operational current (Ie) of the motor FLA must be multiplied by the following factors for selection of the KTB9 Motor Circuit Controller KTB9-40H and KTB7-45H.
Trip classes according to UL 508 Section 52 and IEC 60947-4-1
CLASS 10 = 1.0, CLASS 15 = 1.22, CLASS 20 = 1.42, CLASS 25 = 1.58, CLASS 30 = 1.7 The maximum number of motor starts in 25 cycles/hour with a minimum OFF-time of 120 seconds between cycles. This additional calculation and selecting a larger frame size is necessary to compensate (dissipate) the increased heat resulting from long acceleration applications effecting the rated operational current of the KTB9.

Ordering Instructions

Specify Catalog Number	
Replace (✱) with Coil Code	**See Coil Code table on this page for codes.**

Reversing 3-Component Ecombo Starters ❷❸❹

Rated Oper. Current [A] ❺	Overload Adj. Range [A]	Magnetic Trip [A]	Typical Three Phase [HP]				Catalog Number ❶❸❻
			200V	230V	460V	575V	
KTB9-40H – High Interrupting Capacity (14 x In)							
0.63	0.1...0.5	8.8	~	~	~	~	**CLUE-709✱22-DA63B-FBB**
1.0	1.0...5.0	14	~	~	1/2	1/2	**CLUE-709✱22-DB10B-FCB**
1.6	1.0...5.0	22	~	~	3/4	3/4	**CLUE-709✱22-DB16B-FCB**
2.5	1.0...5.0	35	1/2	1/2	1	1-1/2	**CLUE-709✱22-DB25B-FCB**
4.0	1.0...5.0	56	3/4	3/4	2	3	**CLUE-709✱22-DB40B-FCB**
6.3	3.2...16	88	1	1-1/2	3	5	**CLUE-709✱22-DB63B-FDB**
10	3.2...16	140	2	2	5	7-1/2	**CLUE-709✱22-DC10B-FDB**
16	3.2...16	208	3	3	7-1/2	10	**CLUE-712✱22-DC16B-FDB**
16	3.2...16	224	3	5	10	10	**CLUE-716✱22-DC16B-FDB**
20	5.4...27	280	5	5	10	~	**CLUE-723✱22-DC20B-FEB**
25	5.4...27	350	5	7-1/2	15	~	**CLUE-723✱22-DC25B-FED**
29	11...55	406	7-1/2	10	20	~	**CLUE-730✱22-DC29B-FFD**
32	11...55	448	7-1/2	10	20	~	**CLUE-730✱22-DC32B-FFD**
KTB7-45H – High Interrupting Capacity (13 x In)							
25	5.4...27	325	5	7-1/2	15	20	**CLUE-730✱22-FC25B-FED**
32	11...55	416	7-1/2	10	20	25	**CLUE-730✱22-FC32B-FFD**
32	11...55	416	7-1/2	10	20	25	**CLUE-737✱22-FC32B-FFD**
45	11...55	585	10	10	25	30	**CLUE-737✱22-FC45B-FFD**
45	11...55	585	10	15	30	~	**CLUE-743✱22-FC45B-FFD**

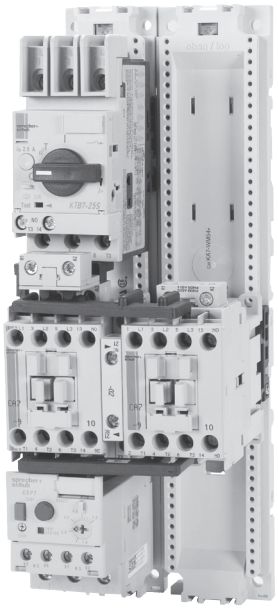

Includes:

- KTB9 Motor Controller
- CAU7 Reversing Contactor (AC)
- CEP7 Solid State Overload Relay
- KT9 Connectors
- Terminal Adaptor for Type E Applications
- Mounting Modules for 40H or 45H Frame Units as required from page F1.17
- See page F3:16 for Factory Options

Coil Codes (✱)

AC Coil Code	Voltage Range	
	50 Hz	60 Hz
024Z	24V	24V
0120	**110V**	**120V**
220W	**200-220V**	**208-240V**
230Z	230V	230V
0277	240V	277V
0415	400-415V	~
0480 ❺	**440V**	**480V**
0600 ❺	550V	600V

❶ Other voltages available, see Section A in this catalog.

❷ All CLUE are supplied with Auxiliary Contacts for customer use as follows;
CLUE-709...723 (1) NO Internal Mount
CLUE-730...737 (1) NO Side Mount
CLUE-743 (1) NO & (1) NC Front Mount
CM7-02 interlock (2) NC (Electrical Interlocks)
All KTB9s are supplied with (1) NO auxiliary contact (A10), which should be used in series with the NC contact on the overload (95-96).

❸ All CAU7 reversing contactors are supplied with CM7-02, including (2) NC contacts for electronic interlocking (not available for customer use).

❹ Horsepower ratings shown in tables are for reference only. ***The final selection of the controller and solid state overload relay depends on the actual motor full load current and service factor.***

❺ The KTB9 Motor Circuit Controller is designed and tested to protect a motor circuit in case of a short circuit. A separate Sprecher + Schuh CEP7-1EF overload relay with selectable trip class should be used to protect the motor against overload. In Applications with motor starting times exceeding 10 seconds (heavy duty starting) the rated operational current (Ie) of the motor FLA must be multiplied by the following factors for selection of the KTB9 Motor Circuit Controller KTB9-40H and KTB7-45H.
Trip classes according to UL 508 Section 52 and IEC 60947-4-1
CLASS 10 = 1.0, CLASS 15 = 1.22, CLASS 20 = 1.42, CLASS 25 = 1.58, CLASS 30 = 1.73

❻ The maximum number of motor starts in 25 cycles/hour with a minimum OFF-time of 120 seconds between cycles. This additional calculation and selecting a larger frame size is necessary to compensate (dissipate) the increased heat resulting from long acceleration applications effecting the rated operational current of the KTB9.

Ordering Instructions

Specify Catalog Number	
Replace (✱) with Coil Code	**See Coil Code table on this page for codes.**

Ecombo and Ecombo*Plus* Modifications ❸

Modification	Change Last Digit in Catalog Number to: ❶
KT9 Auxiliary (Front Mount 250VAC max.) and Trip Contacts	
Auxiliary Contact 1 NO	**B**
Auxiliary Contact 1 NO + 1 NC	**C**
Auxiliary Contact 2 NO	**D**
1 NO SC or OL + 1 NC Auxiliary Contact	**R**
1 NO SC or OL + 1 NO Auxiliary Contact	**S**
1 NC SC or OL + 1 NO Auxiliary Contact	**T**
KT9 Auxiliary (Side Mount 600VAC max.) and Trip Contacts	
Auxiliary Contact 2 NC	**E**

CL and CLU Additions ❸

Add desired suffix AFTER auxiliary contact option code.

Addition	Add Suffix to end of Catalog Number:
CA7 Auxiliary Contacts ❺	
1 NO Auxiliary	**-S10**
1 NC Auxiliary	**-S01**
1 NO + 1 NC Auxiliary	**-S11**
2 NO Auxiliaries	**-S20**
2 NC Auxiliaries	**-S02**
1 NO + 1 NC Auxiliary	**-F11**
1 NO + 2 NC Auxiliary	**-F12**
2 NO + 1 NC Auxiliary	**-F21**
3 NO Auxiliaries	**-F30**
3 NC Auxiliaries	**-F03**
1 NO + 3 NC Auxiliary	**-F13**
3 NO + 1 NC Auxiliary	**-F31**
2 NO + 2 NC Auxiliary	**-F22**
4 NO Auxiliaries	**-F40**
4 NC Auxiliaries	**-F04**
Accessories	
Electronic Interfaces (CA7)	**-JE ❷**
Lockable Twist Knob (KT9) - Black	**-KN**
Lockable Twist Knob (KT9) - Red/Yellow	**-KY**
Type W Mounting Module 45mm (W-32489) or 54mm (W-32490) short module **for CLE/CLUE 9...23 Amp only**	**-W ❹**
Control Wiring Top Plug (CLS/CLUS only)	**-SP**
Control Wiring Bottom Plug (CLS/CLUS only)	**-SB**

❶ For CLE-8... or CLUE-8... , change last digit "X" to one of the modifications listed.
Example: – CLE-809✱10-CA16X changes to CLE-809✱10-CA16B.
For CLE-7... or CLUE-7... , change last digits "B" to one of the modifications listed.
Example: CLE-709✱10-CA16B changes to CLE-709✱10-CA16C.

❷ CRI7E-24 will be used. CRI7E-12 by special order only.

❸ See page A2:19 for limitations on adding auxiliaries to Electronic DC Coil contactors.

❹ Type W Mounting Modules are included as standard on all CLS/CLUS, CLE/CLUE 3-Component Ecombos, and CLE/CLUE 30 amps and greater. See page F1:17 for more information.

UL 60947-4-1 Ratings

Starters with CA8/CAU8 Contactors and KT9 MPCBs'

Suitable for Group Installation on load side of KT9 Manual Motor Controller; Type 1 Short-Circuit Coordination Only

Cat. No.		MPCB	Motor Current Adjustment Range [A]	Connection Module	Reversing Power Wiring Kit	Min Contactor Size ❶	SCCR [kA] Type 1 Coordination		Max Fuse or Circuit Breaker per NEC [A]
DOL Starters	Reversing Starters						480V AC	600V AC	
C-Frame MPCB with CA8/CAU8 Contactors									
CLE-809✱10-CA16X	**CLUE-809✱22-CA16X**	KTA9-32S-0.16A	0.10...0.16	KT9-32S-PEK12	CAUT8-PW	CA8-09	65	50	450
CLE-809✱10-CA25X	**CLUE-809✱22-CA25X**	KTA9-32S-0.25A	0.16...0.25			CA8-09	65	50	450
CLE-809✱10-CA40X	**CLUE-809✱22-CA40X**	KTA9-32S-0.40A	0.25...0.40			CA8-09	65	50	450
CLE-809✱10-CA63X	**CLUE-809✱22-CA63X**	KTA9-32S-0.63A	0.40...0.63			CA8-09	65	50	450
CLE-809✱10-CB10X	**CLUE-809✱22-CB10X**	KTA9-32S-1.0A	0.63...1.0			CA8-09	65	50	450
CLE-809✱10-CB16X	**CLUE-809✱22-CB16X**	KTA9-32S-1.6A	1.0...1.6			CA8-09	65	50	450
CLE-809✱10-CB25X	**CLUE-809✱22-CB25X**	KTA9-32S-2.5A	1.6...2.5			CA8-09	65	30	450
CLE-809✱10-CB40X	**CLUE-809✱22-CB40X**	KTA9-32S-4.0A	2.5...4.0			CA8-09	65	30	450
CLE-809✱10-CB63X	**CLUE-809✱22-CB63X**	KTA9-32S-6.3A	4.0...6.3			CA8-09	65	30	450
CLE-809✱10-CC10X	**CLUE-809✱22-CC10X**	KTA9-32S-10A	6.3...10			CA8-09	65	30	450
CLE-812✱10-CC10X	**CLUE-812✱22-CC10X**	KTA9-32S-10A	6.3...10			CA8-12	65	30	450
CLE-812✱10-CC16X	**CLUE-812✱22-CC16X**	KTA9-32S-16A	10...16			CA8-12	30	30	450

Suitable for Group Installation/Disconnecting Means on load side of KT9 Manual Motor Controller; Type 1 Short-Circuit Coordination Only

C-Frame MPCB with CA8/CAU8 Contactors									
CLE-809✱10-CA16X	**CLUE-809✱22-CA16X**	KTA9-32S-0.16A	0.10...0.16	KT9-32S-PEK12	CAUT8-PW	CA8-09	65	50	450
CLE-809✱10-CA25X	**CLUE-809✱22-CA25X**	KTA9-32S-0.25A	0.16...0.25			CA8-09	65	50	450
CLE-809✱10-CA40X	**CLUE-809✱22-CA40X**	KTA9-32S-0.40A	0.25...0.40			CA8-09	65	50	450
CLE-809✱10-CA63X	**CLUE-809✱22-CA63X**	KTA9-32S-0.63A	0.40...0.63			CA8-09	65	50	450
CLE-809✱10-CB10X	**CLUE-809✱22-CB10X**	KTA9-32S-1.0A	0.63...1.0			CA8-09	65	50	450
CLE-809✱10-CB16X	**CLUE-809✱22-CB16X**	KTA9-32S-1.6A	1.0...1.6			CA8-09	65	50	450
CLE-809✱10-CB25X	**CLUE-809✱22-CB25X**	KTA9-32S-2.5A	1.6...2.5			CA8-09	65	30	450
CLE-809✱10-CB40X	**CLUE-809✱22-CB40X**	KTA9-32S-4.0A	2.5...4.0			CA8-09	65	30	450
CLE-809✱10-CB63X	**CLUE-809✱22-CB63X**	KTA9-32S-6.3A	4.0...6.3			CA8-09	65	30	450
CLE-809✱10-CC10X	**CLUE-809✱22-CC10X**	KTA9-32S-10A	6.3...10			CA8-09	65	30	450
CLE-812✱10-CC10X	**CLUE-812✱22-CC10X**	KTA9-32S-10A	6.3...10			CA8-12	65	30	450
CLE-812✱10-CC16X	**CLUE-812✱22-CC16X**	KTA9-32S-16A	10...16			CA8-12	30	30	450

❶ Similar for other contactor configurations (DOL or Reversing)

UL 60947-4-1 Ratings

Starters with CA8/CAU8 Contactors and KT9 MPCBs'

KT9 Combination Motor Controller as Type F Combination; Type 1 Short-Circuit Coordination Only

Cat. No.		MPCB	Motor Current Adjustment Range [A]	Connection Module	Reversing Power Wiring Kit	Min Contactor Size ❶	SCCR [kA] Type 1 Coordination		Max Fuse or Circuit Breaker per NEC [A]
DOL Starters	Reversing Starters						480V AC	600V AC	
C-Frame MPCB with CA8/CAU8 Contactors									
CLE-809∗10-CA16X	**CLUE-809∗22-CA16X**	KTA9-32S-0.16A	0.10...0.16	KT9-32S-PEK12	CAUT8-PW	CA8-09	65	50	450
CLE-809∗10-CA25X	**CLUE-809∗22-CA25X**	KTA9-32S-0.25A	0.16...0.25			CA8-09	65	50	450
CLE-809∗10-CA40X	**CLUE-809∗22-CA40X**	KTA9-32S-0.40A	0.25...0.40			CA8-09	65	50	450
CLE-809∗10-CA63X	**CLUE-809∗22-CA63X**	KTA9-32S-0.63A	0.40...0.63			CA8-09	65	50	450
CLE-809∗10-CB10X	**CLUE-809∗22-CB10X**	KTA9-32S-1.0A	0.63...1.0			CA8-09	65	50	450
CLE-809∗10-CB16X	**CLUE-809∗22-CB16X**	KTA9-32S-1.6A	1.0...1.6			CA8-09	65	50	450
CLE-809∗10-CB25X	**CLUE-809∗22-CB25X**	KTA9-32S-2.5A	1.6...2.5			CA8-09	65	30	450
CLE-809∗10-CB40X	**CLUE-809∗22-CB40X**	KTA9-32S-4.0A	2.5...4.0			CA8-09	65	30	450
CLE-809∗10-CB63X	**CLUE-809∗22-CB63X**	KTA9-32S-6.3A	4.0...6.3			CA8-09	65	~	450
CLE-809∗10-CC10X	**CLUE-809∗22-CC10X**	KTA9-32S-10A	6.3...10			CA8-09	65	~	450
CLE-812∗10-CC10X	**CLUE-812∗22-CC10X**	KTA9-32S-10A	6.3...10			CA8-12	65	~	450
CLE-812∗10-CC16X	**CLUE-812∗22-CC16X**	KTA9-32S-16A	10...16			CA8-12	30	~	450

UL 60947-4-1 Ratings

Starters with CA7/CAU7 Contactors and KT9 MPCBs'

Suitable for Group Installation on load side of KT9 Manual Motor Controller; Type 1 Short-Circuit Coordination Only

C-Frame MPCB with CA7/CAU7 Contactors									
CLE-709∗10-CA16X	**CLUE-709∗22-CA16X**	KTA9-32S-0.16A	0.10...0.16	KT9-32S-PEC23 or KT9-32S-PNC23	CAUT7-PW23	CA7-9	65	50	450
CLE-709∗10-CA25X	**CLUE-709∗22-CA25X**	KTA9-32S-0.25A	0.16...0.25			CA7-9	65	50	450
CLE-709∗10-CA40X	**CLUE-709∗22-CA40X**	KTA9-32S-0.40A	0.25...0.40			CA7-9	65	50	450
CLE-709∗10-CA63X	**CLUE-709∗22-CA63X**	KTA9-32S-0.63A	0.40...0.63			CA7-9	65	50	450
CLE-709∗10-CB10X	**CLUE-709∗22-CB10X**	KTA9-32S-1.0A	0.63...1.0			CA7-9	65	50	450
CLE-709∗10-CB16X	**CLUE-709∗22-CB16X**	KTA9-32S-1.6A	1.0...1.6			CA7-9	65	50	450
CLE-709∗10-CB25X	**CLUE-709∗22-CB25X**	KTA9-32S-2.5A	1.6...2.5			CA7-9	65	30	450
CLE-709∗10-CB40X	**CLUE-709∗22-CB40X**	KTA9-32S-4.0A	2.5...4.0			CA7-9	65	30	450
CLE-709∗10-CB63X	**CLUE-709∗22-CB63X**	KTA9-32S-6.3A	4.0...6.3			CA7-9	65	30	450
CLE-709∗10-CC10X	**CLUE-709∗22-CC10X**	KTA9-32S-10A	6.3...10			CA7-9	65	30	450
CLE-712∗10-CC10X	**CLUE-712∗22-CC10X**	KTA9-32S-10A	6.3...10			CA7-12	30	30	450
CLE-716∗10-CC16X	**CLUE-716∗22-CC16X**	KTA9-32S-16A	10...16			CA7-16	30	30	450
CLE-716∗10-CC20X	**CLUE-716∗22-CC20X**	KTA9-32S-20A	14.5...20			CA7-16	30	30	450
CLE-723∗10-CC25X	**CLUE-723∗22-CC25X**	KTA9-32S-25A	18...25			CA7-23	30	18	450
CLE-730∗10-CC25X	**CLUE-730∗22-CC25X**	KTA9-32S-25A	18...25	-	CAUT7-PW37	CA7-30	30	18	450
CLE-730∗10-CC29X	**CLUE-730∗22-CC29X**	KTA9-32S-29A	23...29			CA7-30	30	10	450
CLE-737∗10-CC32X	**CLUE-737∗22-CC32X**	KTA9-32S-32A	26.5...32			CA7-37	30	10	450
D-Frame MPCB with CA7/CAU7 Contactors									
CLE-709∗10-DA63X	**CLUE-709∗22-DA63X**	KTA9-40H-0.63A	0.40...0.63	KT9-40H-PEC23 or KT9-40H-PNC23	CAUT7-PW23	CA7-9	65	50	450
CLE-709∗10-DB10X	**CLUE-709∗22-DB10X**	KTA9-40H-1.0A	0.63...1.0			CA7-9	65	50	450
CLE-709∗10-DB16X	**CLUE-709∗22-DB16X**	KTA9-40H-1.6A	1.0...1.6			CA7-9	65	50	450
CLE-709∗10-DB25X	**CLUE-709∗22-DB25X**	KTA9-40H-2.5A	1.6...2.5			CA7-9	65	30	450
CLE-709∗10-DB40X	**CLUE-709∗22-DB40X**	KTA9-40H-4.0A	2.5...4.0			CA7-9	65	30	450
CLE-709∗10-DB63X	**CLUE-709∗22-DB63X**	KTA9-40H-6.3A	4.0...6.3			CA7-9	65	30	450
CLE-709∗10-DC10X	**CLUE-709∗22-DC10X**	KTA9-40H-10A	6.3...10			CA7-9	65	30	450
CLE-712∗10-DC10X	**CLUE-712∗22-DC10X**	KTA9-40H-10A	6.3...10			CA7-12	65	30	450
CLE-716∗10-DC16X	**CLUE-716∗22-DC16X**	KTA9-40H-16A	10...16			CA7-16	65	30	450
CLE-716∗10-DC20X	**CLUE-716∗22-DC20X**	KTA9-40H-20A	14.5...20			CA7-16	65	30	450
CLE-723∗10-DC20X	**CLUE-723∗22-DC20X**	KTA9-40H-20A	14.5...20			CA7-23	65	30	450
CLE-723∗10-DC25X	**CLUE-723∗22-DC25X**	KTA9-40H-25A	18...25			CA7-23	50	30	450
CLE-730∗10-DC25X	**CLUE-730∗22-DC25X**	KTA9-40H-25A	18...25	KT9-40H-PEC37 or KT9-40H-PNC37	CAUT7-PW37	CA7-30	50	30	450
CLE-730∗10-DC29X	**CLUE-730∗22-DC29X**	KTA9-40H-29A	23...29			CA7-30	50	30	450
CLE-737∗10-DC32X	**CLUE-737∗22-DC32X**	KTA9-40H-32A	26.5...32			CA7-37	50	30	450
CLE-737∗10-DC36X	**CLUE-737∗22-DC36X**	KTA9-40H-36A	30...36			CA7-37	30	30	450
CLE-737∗10-DC40X	**CLUE-737∗22-DC40X**	KTA9-40H-40A	34...40			CA7-37	30	30	450

❶ Similar for other contactor configurations (DOL or Reversing)

UL 60947-4-1 Ratings

Starters with CA7/CAU7 Contactors and KT9 MPCBs'

Suitable for Group Installation/Disconnecting Means on load side of KT9 Manual Motor Controller; Type 1 Short-Circuit Coordination Only

Cat. No.		MPCB	Motor Current Adjustment Range [A]	Connection Module	Reversing Power Wiring Kit	Min Contactor Size ❶	SCCR [kA] Type 1 Coordination		Max Fuse or Circuit Breaker per NEC [A]
DOL Starters	Reversing Starters						480V AC	600V AC	
C-Frame MPCB with CA7/CAU7 Contactors									
CLE-709✱10-CA16X	**CLE-709✱22-CA16X**	KTA9-32S-0.16A	0.10...0.16	KT9-32S-PEC23 or KT9-32S-PNC23	CAUT7-PW23	CA7-9	65	50	450
CLE-709✱10-CA25X	**CLE-709✱22-CA25X**	KTA9-32S-0.25A	0.16...0.25			CA7-9	65	50	450
CLE-709✱10-CA40X	**CLE-709✱22-CA40X**	KTA9-32S-0.40A	0.25...0.40			CA7-9	65	50	450
CLE-709✱10-CA63X	**CLE-709✱22-CA63X**	KTA9-32S-0.63A	0.40...0.63			CA7-9	65	50	450
CLE-709✱10-CB10X	**CLE-709✱22-CB10X**	KTA9-32S-1.0A	0.63...1.0			CA7-9	65	50	450
CLE-709✱10-CB16X	**CLE-709✱22-CB16X**	KTA9-32S-1.6A	1.0...1.6			CA7-9	65	50	450
CLE-709✱10-CB25X	**CLE-709✱22-CB25X**	KTA9-32S-2.5A	1.6...2.5			CA7-9	65	30	450
CLE-709✱10-CB40X	**CLE-709✱22-CB40X**	KTA9-32S-4.0A	2.5...4.0			CA7-9	65	30	450
CLE-709✱10-CB63X	**CLE-709✱22-CB63X**	KTA9-32S-6.3A	4.0...6.3			CA7-9	65	30	450
CLE-709✱10-CC10X	**CLE-709✱22-CC10X**	KTA9-32S-10A	6.3...10			CA7-9	65	30	450
CLE-712✱10-CC10X	**CLE-712✱22-CC10X**	KTA9-32S-10A	6.3...10			CA7-12	30	30	450
CLE-716✱10-CC16X	**CLE-716✱22-CC16X**	KTA9-32S-16A	10...16			CA7-16	30	30	450
CLE-716✱10-CC20X	**CLE-716✱22-CC20X**	KTA9-32S-20A	14.5...20			CA7-16	30	10	450
CLE-723✱10-CC25X	**CLE-723✱22-CC25X**	KTA9-32S-25A	18...25			CA7-23	10	5	450
CLE-730✱10-CC25X	**CLE-730✱22-CC25X**	KTA9-32S-25A	18...25	-	CAUT7-PW37	CA7-30	30	5	450
CLE-730✱10-CC29X	**CLE-730✱22-CC29X**	KTA9-32S-29A	23...29			CA7-30	10	~	450
CLE-737✱10-CC32X	**CLE-737✱22-CC32X**	KTA9-32S-32A	26.5...32			CA7-37	10	~	450
D-Frame MPCB with CA7/CAU7 Contactors									
CLE-709✱10-DA63X	**CLE-709✱22-DA63X**	KTA9-40H-0.63A	0.40...0.63	KT9-40H-PEC23 or KT9-40H-PNC23	CAUT7-PW23	CA7-9	65	50	450
CLE-709✱10-DB10X	**CLE-709✱22-DB10X**	KTA9-40H-1.0A	0.63...1.0			CA7-9	65	50	450
CLE-709✱10-DB16X	**CLE-709✱22-DB16X**	KTA9-40H-1.6A	1.0...1.6			CA7-9	65	50	450
CLE-709✱10-DB25X	**CLE-709✱22-DB25X**	KTA9-40H-2.5A	1.6...2.5			CA7-9	65	30	450
CLE-709✱10-DB40X	**CLE-709✱22-DB40X**	KTA9-40H-4.0A	2.5...4.0			CA7-9	65	30	450
CLE-709✱10-DB63X	**CLE-709✱22-DB63X**	KTA9-40H-6.3A	4.0...6.3			CA7-9	65	30	450
CLE-709✱10-DC10X	**CLE-709✱22-DC10X**	KTA9-40H-10A	6.3...10			CA7-9	65	30	450
CLE-712✱10-DC10X	**CLE-712✱22-DC10X**	KTA9-40H-10A	6.3...10			CA7-12	65	30	450
CLE-716✱10-DC16X	**CLE-716✱22-DC16X**	KTA9-40H-16A	10...16			CA7-16	65	30	450
CLE-716✱10-DC20X	**CLE-716✱22-DC20X**	KTA9-40H-20A	14.5...20			CA7-16	65	30	450
CLE-723✱10-DC20X	**CLE-723✱22-DC20X**	KTA9-40H-20A	14.5...20			CA7-23	65	30	450
CLE-723✱10-DC25X	**CLE-723✱22-DC25X**	KTA9-40H-25A	18...25			CA7-23	50	30	450
CLE-730✱10-DC25X	**CLE-730✱22-DC25X**	KTA9-40H-25A	18...25	KT9-40H-PEC37 or KT9-40H-PNC37	CAUT7-PW37	CA7-30	50	30	450
CLE-730✱10-DC29X	**CLE-730✱22-DC29X**	KTA9-40H-29A	23...29			CA7-30	50	30	450
CLE-737✱10-DC32X	**CLE-737✱22-DC32X**	KTA9-40H-32A	26.5...32			CA7-37	30	18	450
CLE-737✱10-DC36X	**CLE-737✱22-DC36X**	KTA9-40H-36A	30...36			CA7-37	30	18	450
CLE-737✱10-DC40X	**CLE-737✱22-DC40X**	KTA9-40H-40A	34...40			CA7-37	30	18	450

KT9 Combination Motor Controller as Type F Combination; Type 1 Short-Circuit Coordination Only

C-Frame MPCB with CA7/CAU7 Contactors									
CLE-709✱10-CA16X	**CLE-709✱22-CA16X**	KTA9-32S-0.16A	0.10...0.16	KT9-32S-PEC23 or KT9-32S-PNC23	CAUT7-PW23	CA7-9	65	50	450
CLE-709✱10-CA25X	**CLE-709✱22-CA25X**	KTA9-32S-0.25A	0.16...0.25			CA7-9	65	50	450
CLE-709✱10-CA40X	**CLE-709✱22-CA40X**	KTA9-32S-0.40A	0.25...0.40			CA7-9	65	50	450
CLE-709✱10-CA63X	**CLE-709✱22-CA63X**	KTA9-32S-0.63A	0.40...0.63			CA7-9	65	50	450
CLE-709✱10-CB10X	**CLE-709✱22-CB10X**	KTA9-32S-1.0A	0.63...1.0			CA7-9	65	50	450
CLE-709✱10-CB16X	**CLE-709✱22-CB16X**	KTA9-32S-1.6A	1.0...1.6			CA7-9	65	50	450
CLE-709✱10-CB25X	**CLE-709✱22-CB25X**	KTA9-32S-2.5A	1.6...2.5			CA7-9	65	30	450
CLE-709✱10-CB40X	**CLE-709✱22-CB40X**	KTA9-32S-4.0A	2.5...4.0			CA7-9	65	30	450
CLE-709✱10-CB63X	**CLE-709✱22-CB63X**	KTA9-32S-6.3A	4.0...6.3			CA7-9	65	~	450
CLE-709✱10-CC10X	**CLE-709✱22-CC10X**	KTA9-32S-10A	6.3...10			CA7-9	65	~	450
CLE-712✱10-CC10X	**CLE-712✱22-CC10X**	KTA9-32S-10A	6.3...10			CA7-12	30	~	450
CLE-716✱10-CC16X	**CLE-716✱22-CC16X**	KTA9-32S-16A	10...16			CA7-16	30	~	450
D-Frame MPCB with CA7/CAU7 Contactors									
CLE-709✱10-DA63X	**CLE-709✱22-DA63X**	KTA9-40H-0.63A	0.40...0.63	KT9-40H-PEC23 or KT9-40H-PNC23	CAUT7-PW23	CA7-9	65	50	450
CLE-709✱10-DB10X	**CLE-709✱22-DB10X**	KTA9-40H-1.0A	0.63...1.0			CA7-9	65	50	450
CLE-709✱10-DB16X	**CLE-709✱22-DB16X**	KTA9-40H-1.6A	1.0...1.6			CA7-9	65	50	450
CLE-709✱10-DB25X	**CLE-709✱22-DB25X**	KTA9-40H-2.5A	1.6...2.5			CA7-9	65	30	450
CLE-709✱10-DB40X	**CLE-709✱22-DB40X**	KTA9-40H-4.0A	2.5...4.0			CA7-9	65	30	450
CLE-709✱10-DB63X	**CLE-709✱22-DB63X**	KTA9-40H-6.3A	4.0...6.3			CA7-9	65	30	450
CLE-709✱10-DC10X	**CLE-709✱22-DC10X**	KTA9-40H-10A	6.3...10			CA7-9	65	30	450
CLE-712✱10-DC10X	**CLE-712✱22-DC10X**	KTA9-40H-10A	6.3...10			CA7-12	65	30	450
CLE-716✱10-DC16X	**CLE-716✱22-DC16X**	KTA9-40H-16A	10...16			CA7-16	65	30	450
CLE-723✱10-DC20X	**CLE-723✱22-DC20X**	KTA9-40H-20A	14.5...20			CA7-23	65	~	450
CLE-723✱10-DC25X	**CLE-723✱22-DC25X**	KTA9-40H-25A	18...25			CA7-23	50	~	450
CLE-730✱10-DC29X	**CLE-730✱22-DC29X**	KTA9-40H-29A	23...29	KT9-40H-PEC37 or KT9-40H-PNC37	CAUT7-PW37	CA7-30	50	~	450
CLE-737✱10-DC32X	**CLE-737✱22-DC32X**	KTA9-40H-32A	26.5...32			CA7-37	30	~	450
CLE-737✱10-DC36X	**CLE-737✱22-DC36X**	KTA9-40H-36A	30...36			CA7-37	30	~	450
CLE-737✱10-DC40X	**CLE-737✱22-DC40X**	KTA9-40H-40A	34...40			CA7-37	30	~	450

❶ Similar for other contactor configurations (DOL or Reversing)

IEC 60947-4-1 Ratings

Starters with CA8/CAU8 Contactors and KT9 MPCBs'

IEC 60947-4-1; Type 1 Short-Circuit Coordination

Cat. No.		MPCB	Motor Current Adjustment Range [A]	Connection Module	Reversing Power Wiring Kit	Min Contactor Size ❶	SCCR [kA] Type 1 Coordination	
DOL Starters	Reversing Starters						415V AC	525V AC
C-Frame MPCB with CA8/CAU8 Contactors								
CLE-809∗10-CA16X	**CLUE-809∗22-CA16X**	KTA9-32S-0.16A	0.10...0.16	KT9-32S-PEK12	CAUT8-PW	CA8-09	65	50
CLE-809∗10-CA25X	**CLUE-809∗22-CA25X**	KTA9-32S-0.25A	0.16...0.25			CA8-09	65	50
CLE-809∗10-CA40X	**CLUE-809∗22-CA40X**	KTA9-32S-0.40A	0.25...0.40			CA8-09	65	50
CLE-809∗10-CA63X	**CLUE-809∗22-CA63X**	KTA9-32S-0.63A	0.40...0.63			CA8-09	65	50
CLE-809∗10-CB10X	**CLUE-809∗22-CB10X**	KTA9-32S-1.0A	0.63...1.0			CA8-09	65	50
CLE-809∗10-CB16X	**CLUE-809∗22-CB16X**	KTA9-32S-1.6A	1.0...1.6			CA8-09	65	50
CLE-809∗10-CB25X	**CLUE-809∗22-CB25X**	KTA9-32S-2.5A	1.6...2.5			CA8-09	65	30
CLE-809∗10-CB40X	**CLUE-809∗22-CB40X**	KTA9-32S-4.0A	2.5...4.0			CA8-09	65	30
CLE-809∗10-CB63X	**CLUE-809∗22-CB63X**	KTA9-32S-6.3A	4.0...6.3			CA8-09	65	30
CLE-809∗10-CC10X	**CLUE-809∗22-CC10X**	KTA9-32S-10A	6.3...10			CA8-09	65	30
CLE-812∗10-CC10X	**CLUE-812∗22-CC10X**	KTA9-32S-10A	6.3...10			CA8-12	65	30
CLE-812∗10-CC16X	**CLUE-812∗22-CC16X**	KTA9-32S-16A	10...16			CA8-12	30	30

Starters with CA7/CAU7 Contactors and KT9 MPCBs'

IEC 60947-4-1; Type 2 Short-Circuit Coordination

Cat. No.		MPCB	Motor Current Adjustment Range [A]	Connection Module	Reversing Power Wiring Kit	Min Contactor Size ❶	SCCR [kA] Type 2 Coordination		
DOL Starters	Reversing Starters						415V AC	525V AC	690V AC
C-Frame MPCB with CA7/CAU7 Contactors									
CLE-709∗10-CA16X	**CLE-709∗10-CA16X**	KTA9-32S-0.16A	0.10...0.16	KT9-32S-PEC23 or KT9-32S-PNC23	CAUT7-PW23	CA7-9	100	65	50
CLE-709∗10-CA25X	**CLE-709∗10-CA25X**	KTA9-32S-0.25A	0.16...0.25			CA7-9	100	65	50
CLE-709∗10-CA40X	**CLE-709∗10-CA40X**	KTA9-32S-0.40A	0.25...0.40			CA7-9	100	65	50
CLE-709∗10-CA63X	**CLE-709∗10-CA63X**	KTA9-32S-0.63A	0.40...0.63			CA7-9	100	65	50
CLE-709∗10-CB10X	**CLE-709∗10-CB10X**	KTA9-32S-1.0A	0.63...1.0			CA7-9	100	65	50
CLE-709∗10-CB16X	**CLE-709∗10-CB16X**	KTA9-32S-1.6A	1.0...1.6			CA7-9	100	50	50
CLE-723∗10-CB25X	**CLE-723∗10-CB25X**	KTA9-32S-2.5A	1.6...2.5			CA7-23	65	50	~
CLE-723∗10-CB40X	**CLE-723∗10-CB40X**	KTA9-32S-4.0A	2.5...4.0			CA7-23	65	~	~
CLE-723∗10-CB63X	**CLE-723∗10-CB63X**	KTA9-32S-6.3A	4.0...6.3			CA7-23	65	~	~
CLE-723∗10-CC10X	**CLE-723∗10-CC10X**	KTA9-32S-10A	6.3...10			CA7-23	65	~	~
CLE-730∗10-CC16X	**CLE-730∗10-CC16X**	KTA9-32S-16A	10...16	~	CAUT7-PW37	CA7-30	50	~	~
CLE-730∗10-CC20X	**CLE-730∗10-CC20X**	KTA9-32S-20A	14.5...20			CA7-30	50	~	~
CLE-730∗10-CC25X	**CLE-730∗10-CC25X**	KTA9-32S-25A	18...25			CA7-30	15	~	~
CLE-730∗10-CC29X	**CLE-730∗10-CC29X**	KTA9-32S-29A	23...29			CA7-30	15	~	~
CLE-730∗10-CC32X	**CLE-730∗10-CC32X**	KTA9-32S-32A	26.5...32			CA7-30	15	~	~
D-Frame MPCB with CA7/CAU7 Contactors									
CLE-709∗10-DA63X	**CLUE-709∗22-DA63X**	KTA9-40H-0.63A	0.40...0.63	KT9-40H-PEC23 or KT9-40H-PNC23	CAUT7-PW23	CA7-9	100	65	50
CLE-709∗10-DB10X	**CLUE-709∗22-DB10X**	KTA9-40H-1.0A	0.63...1.0			CA7-9	100	65	50
CLE-709∗10-DB16X	**CLUE-709∗22-DB16X**	KTA9-40H-1.6A	1.0...1.6			CA7-9	100	50	50
CLE-709∗10-DB25X	**CLUE-709∗22-DB25X**	KTA9-40H-2.5A	1.6...2.5			CA7-9	100	50	50
						CA7-12	~	50	~
						CA7-23	~	~	50
CLE-709∗10-DB40X	**CLUE-709∗22-DB40X**	KTA9-40H-4.0A	2.5...4.0			CA7-9	65	50	50
						CA7-12	~	50	~
						CA7-23	~	~	50
CLE-709∗10-DB63X	**CLUE-709∗22-DB63X**	KTA9-40H-6.3A	4.0...6.3			CA7-9	65	50	50
						CA7-12	~	50	~
						CA7-23	~	~	50
CLE-709∗10-DC10X	**CLUE-709∗22-DC10X**	KTA9-40H-10A	6.3...10			CA7-9	65	50	50
						CA7-12	~	50	~
					CAUT7-PW37	CA7-30	~	~	50
CLE-723∗10-DC16X	**CLUE-723∗22-DC16X**	KTA9-40H-16A	10...16		CAUT7-PW23	CA7-23	65	50	~
CLE-723∗10-DC20X	**CLUE-723∗22-DC20X**	KTA9-40H-20A	14.5...20			CA7-23	65	~	~
CLE-723∗10-DC25X	**CLUE-723∗22-DC25X**	KTA9-40H-25A	18...25			CA7-23	65	~	~
CLE-730∗10-DC29X	**CLUE-730∗22-DC29X**	KTA9-40H-29A	23...29	KT9-40H-PEC37 or KT9-40H-PNC37	CAUT7-PW37	CA7-30	65	~	~
CLE-730∗10-DC32X	**CLUE-730∗22-DC32X**	KTA9-40H-32A	26.5...32			CA7-30	65	~	~
CLE-737∗10-DC36X	**CLUE-737∗22-DC36X**	KTA9-40H-36A	30...36			CA7-37	65	~	~
CLE-737∗10-DC40X	**CLUE-737∗22-DC40X**	KTA9-40H-40A	34...40			CA7-37	65	~	~

❶ Similar for other contactor configurations (DOL or Reversing)

2-Component Ecombo Starters

CLE Non-Reversing Typical Diagram

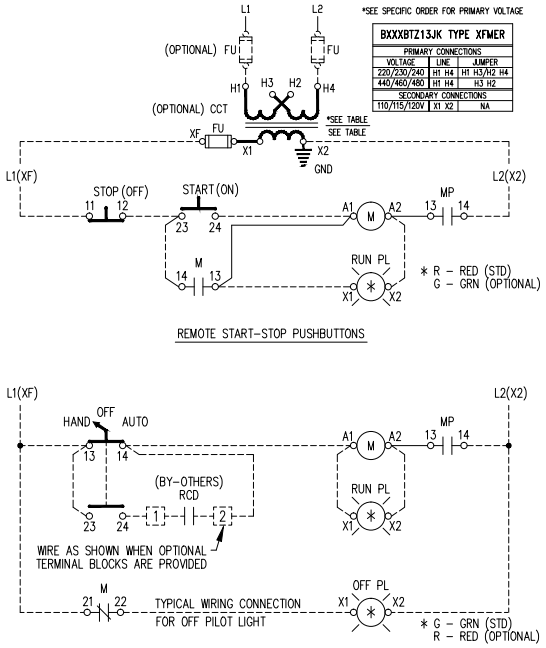

CUSTOMER TO SUPPLY PROPER BRANCH CIRCUIT PROTECTION AS PER LOCAL CODES. (USE 75°C COPPER WIRE ONLY)

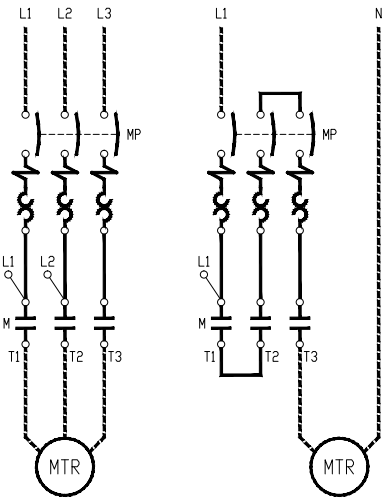

CLE 3-phase CLE 1-phase

NOTES:
1) RCD: STANDS FOR REMOTE CONTROL DEVICE BY CUSTOMER.
2) MP: KT9 "TYPE E" MOTOR CONTROLLER.
3) X2 TERMINAL GROUNDED AS STANDARD, REMOVE GROUND IF NOT REQUIRED.

3-Component Ecombo Starters

CLE + O/L Non-Reversing Typical Diagram

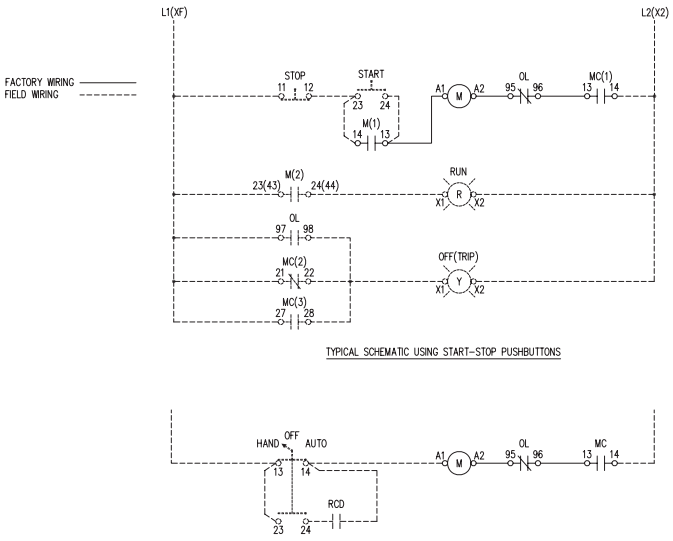

CUSTOMER TO SUPPLY PROPER BRANCH CIRCUIT PROTECTION AS PER LOCAL CODES. (USE 75°C COPPER WIRE ONLY)

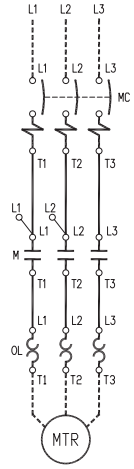

CLE + O/L

NOTES:
1) RCD: STANDS FOR REMOTE CONTROL DEVICE BY CUSTOMER.
2) MC: KTB9 MOTOR CONTROLLER.

Reversing and Non-Reversing Ecombo Starters CLE / CLUE-709...723

CLE / CLUE-709...723

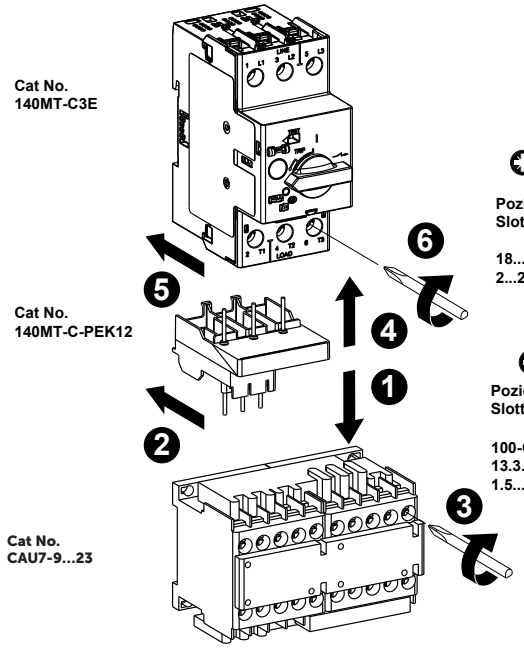

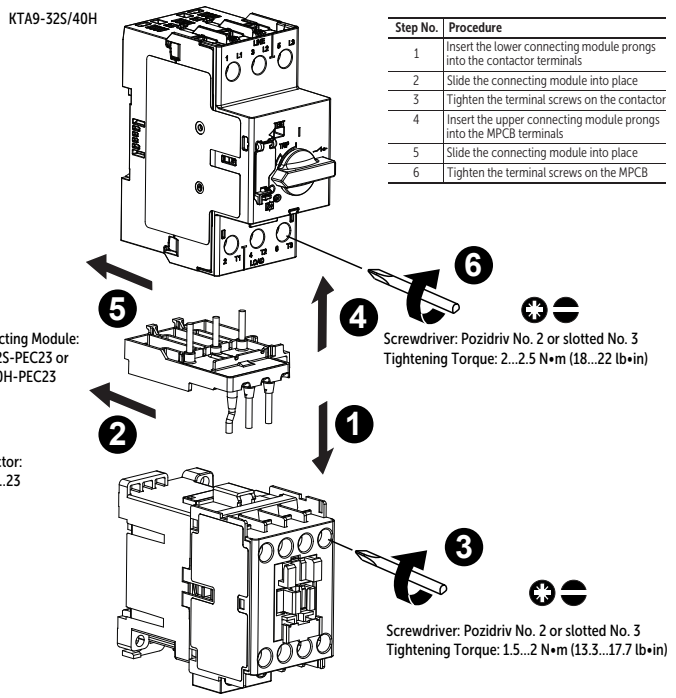

Step No.	Procedure
1	Insert the lower connecting module prongs into the contactor terminals
2	Slide the connecting module into place
3	Tighten the terminal screws on the contactor
4	Insert the upper connecting module prongs into the MPCB terminals
5	Slide the connecting module into place
6	Tighten the terminal screws on the MPCB

KTA9-32S/40H + KT9-32S/40H-PEC23 + CA7-9...23/CAU7-9...23

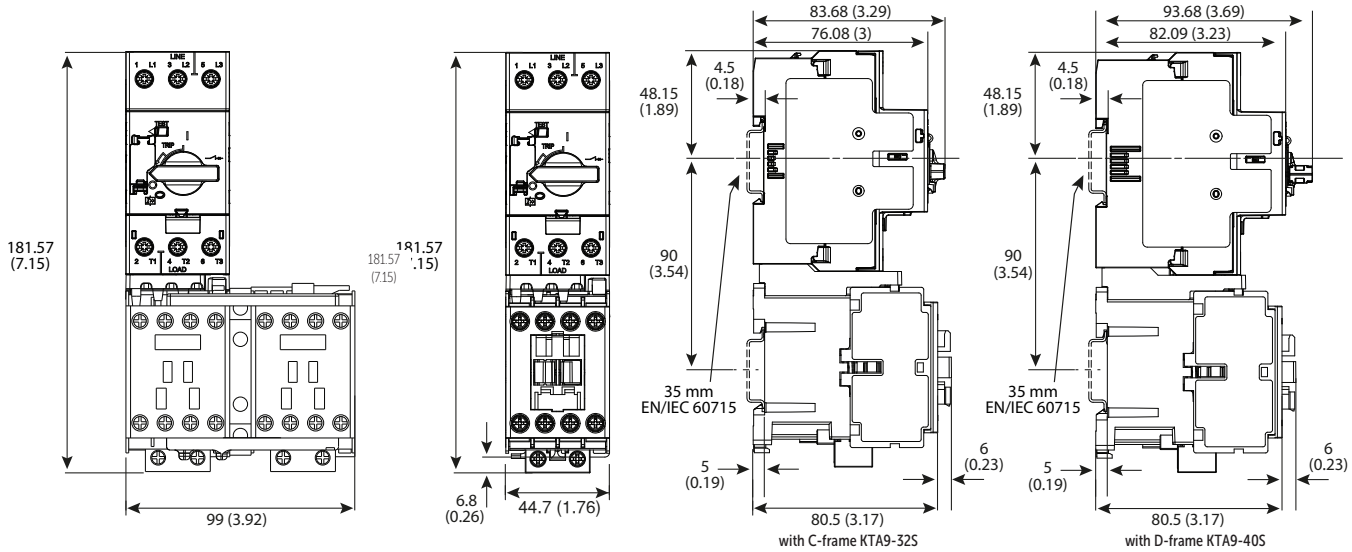

Reversing | Non-Reversing | with C-Frame KT9 MPCB | with D-Frame KT9 MPCB

Reversing and Non-Reversing Ecombo Starters CLE / CLUE-730...737

CLE / CLUE-730...737

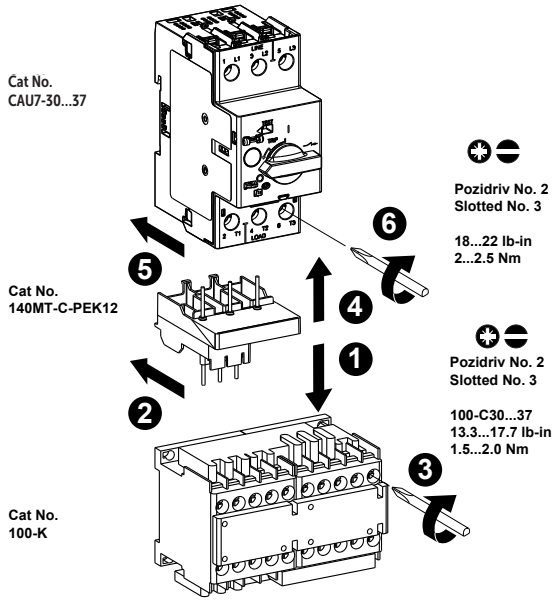

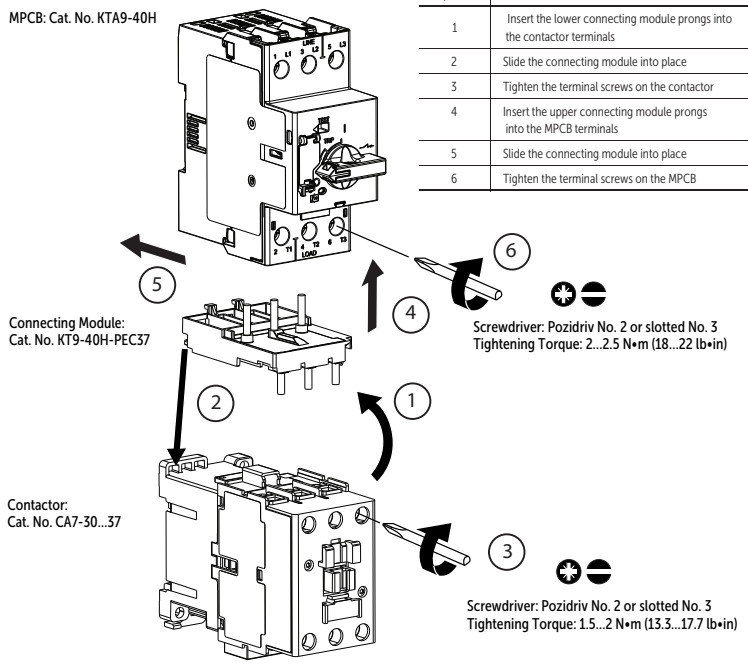

Step No.	Procedure
1	Insert the lower connecting module prongs into the contactor terminals
2	Slide the connecting module into place
3	Tighten the terminal screws on the contactor
4	Insert the upper connecting module prongs into the MPCB terminals
5	Slide the connecting module into place
6	Tighten the terminal screws on the MPCB

KTA9-40H + KT9-32S / 40H-PEC23 + CA7-30...37 / CAU7-30...37

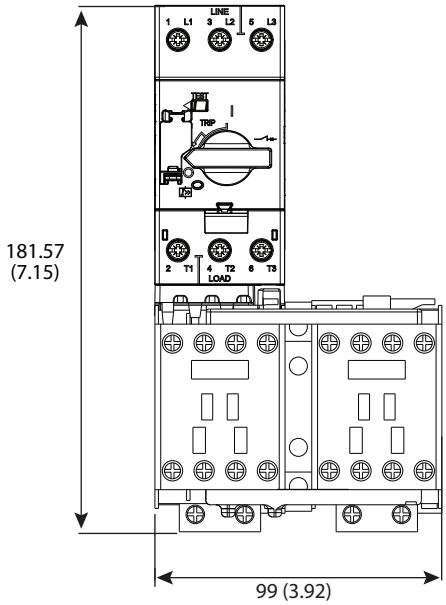

Reversing

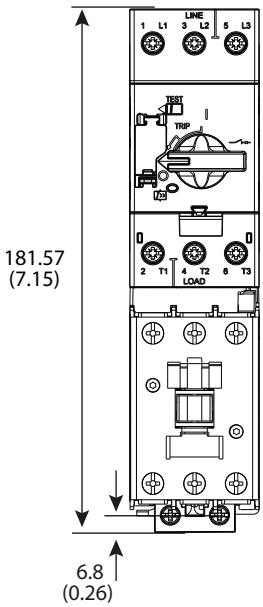

Non-Reversing

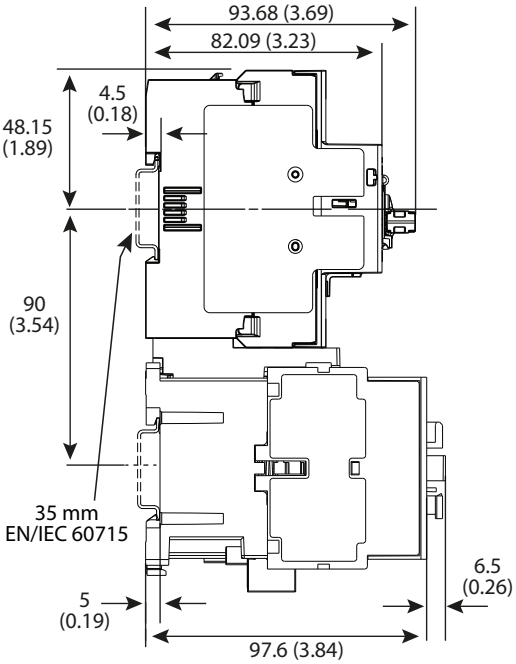

Reversing and Non-Reversing Ecombo Starters CLE / CLUE-809...812

CLE / CLUE-809...812

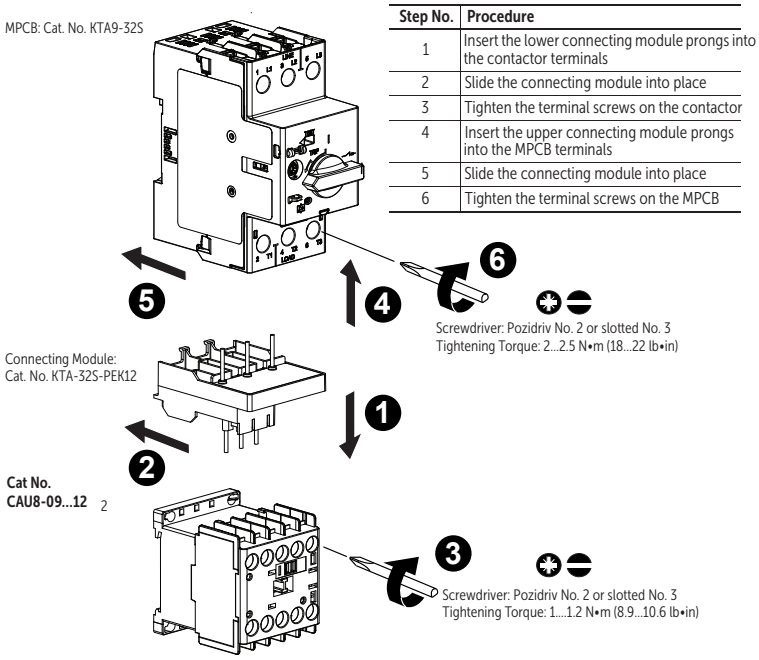

Step No.	Procedure
1	Insert the lower connecting module prongs into the contactor terminals
2	Slide the connecting module into place
3	Tighten the terminal screws on the contactor
4	Insert the upper connecting module prongs into the MPCB terminals
5	Slide the connecting module into place
6	Tighten the terminal screws on the MPCB

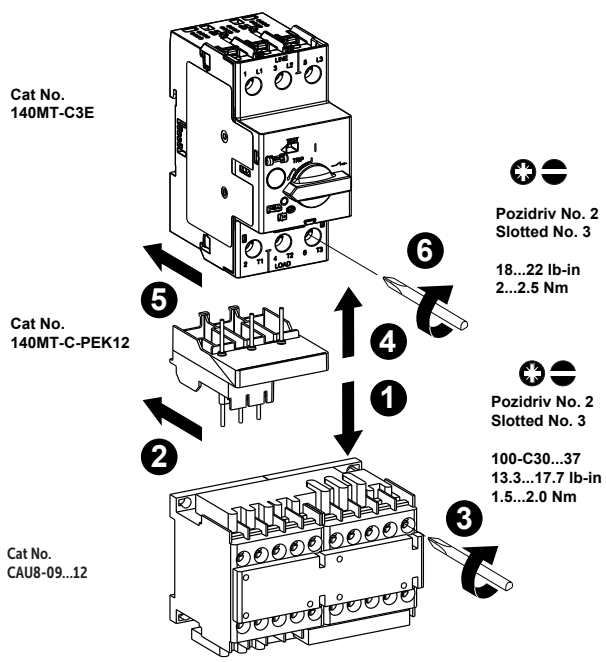

KTA9-32S + KT9-32S-PEK12 + CA8-09...12 / CAU8-09...12

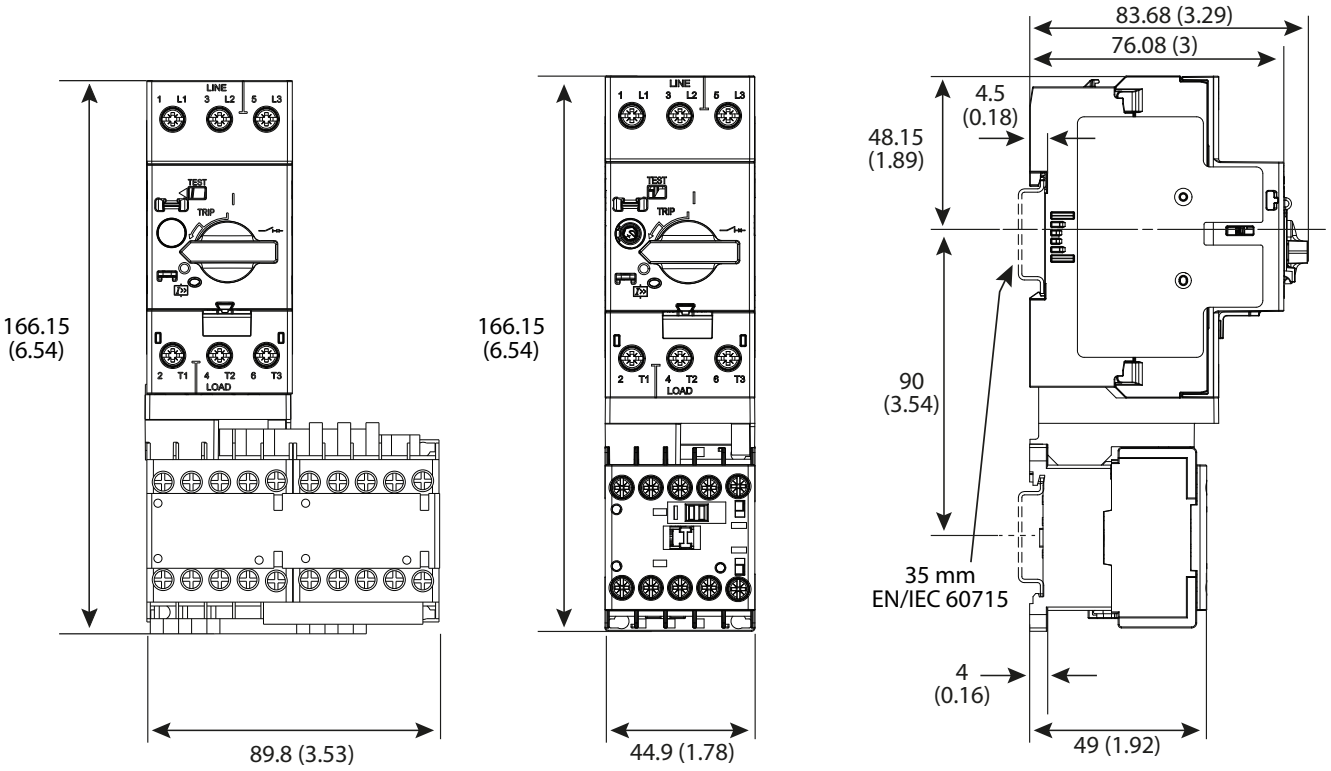

Reversing and Non-Reversing Ecombo Starters

Mounting Position

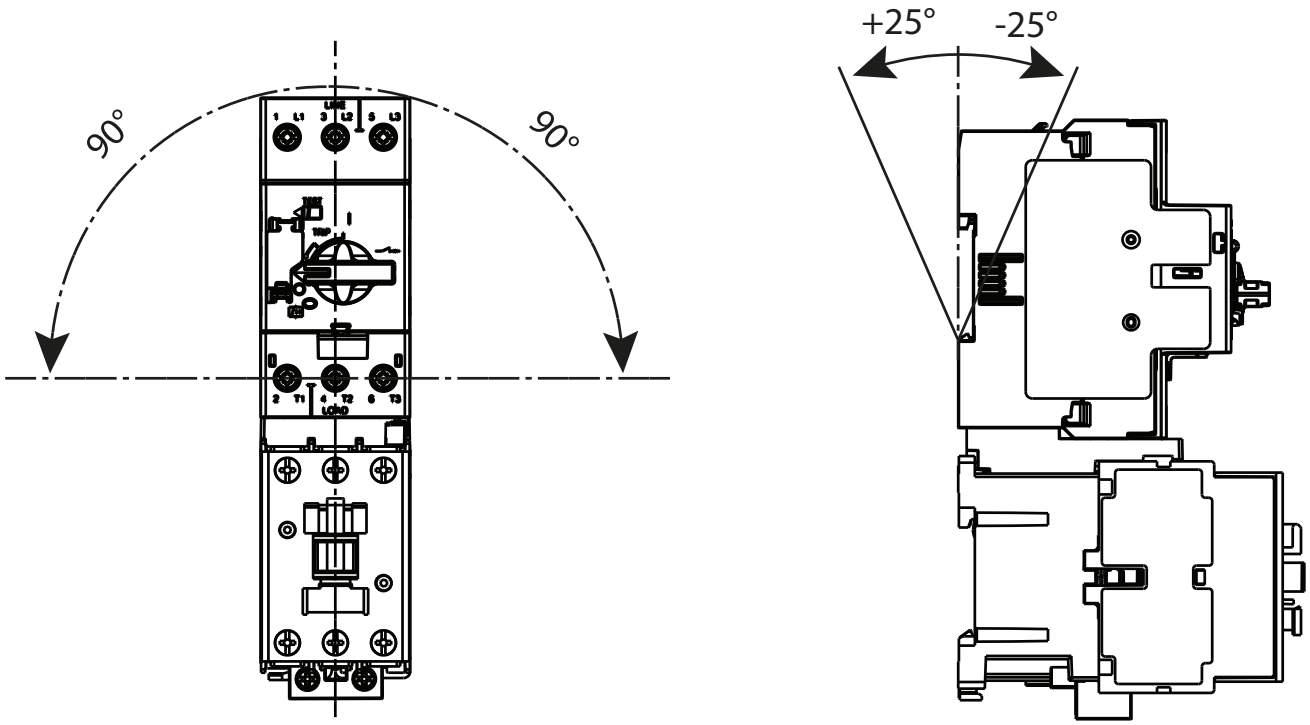

Enclosed Motor Controllers and Molded Case Circuit Breakers

KTA9 Type-E Self Protected Manual Motor Controllers
Page F4:2

Explosion-Proof Motor Controllers

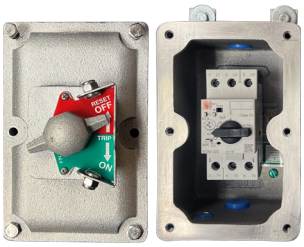

KTA9_EX
Page F4:6

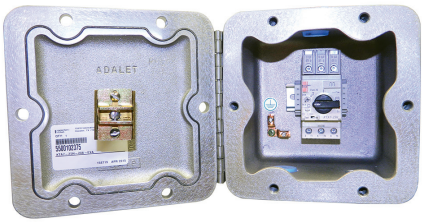

KTA9_EZ
Page F4:7

The following pages contain a selection of single enclosed KTA9 & KTC9 motor controllers which can be applied as an individual Manual Self-Protected Combination Motor Controller or as an individual Manual Motor Starter dependent on the ratings of the individual unit.

- A Self-protected Combination Motor Controller (UL508 Construction Type E) performs all the functions of a Manual Combo starter including a UL approved means "Disconnect" with lockable and defeatable handle mechanism, short-circuit protection and overload protection for motor applications.
- A UL508 Manual Motor Controller is a manual motor starter including a motor disconnect combined with an overload relay.

Both can be combined with auxiliary contacts, shunt-trip or under-voltage trip units to meet your application requirements. The section that follows includes non-metallic enclosures, metallic enclosures and explosion-proof enclosures.

Enclosed Molded Case Circuit Breakers

The following pages contain a selection of individual enclosed KTU9 molded case circuit breakers for the protection of non-motor loads. KTU9 is a 480Y/277Volt or 600Y/347 volt UL489 approved circuit breaker and the selection of enclosures or combined with matching environmentally approved thru-the-door handle disconnect mechanism which also complies with UL489 standards. KTU9 offers at least 65 KAIC withstand ratings which exceeds those offered by many 600 Volt Class Molded Case Circuit Breakers which are larger and more expensive. Enclosed KTU9 can be combined with auxiliary contacts, shunt-trip or under-voltage trip units to meet your application requirements.

KTU9 Molded Case Circuit Breakers
Page F4:8

Enclosed Type E/F Combination Starters

KTA9 or KTC9 can be applied in combination with a CA7 contactor for remote control and an enclosure with matching environmentally approved thru-the-door handle disconnect mechanism to meet all requirements for a Construction Type E or F Combination Starter. The following pages contain a selection of individual Combo starters which are smaller and less expensive than Classic Construction Type A (Fusible), or Type C (Thermal-magnetic Molded Case Circuit Breaker) as offered in Section C of this catalog. The following types are offered:

CX7 Ecombo KWIKStarters
Page F4:13

- Non-metallic enclosed Combo KwikStarter CX7 and CXU7 with AC or DC coils available as factory assembled or in kit form for field assembly
- Metallic enclosed Combo CX7 and CXU7with AC or DC coils
- Explosion-proof enclosed CX7 and CXU7with AC or DC coils

A variety of modifications are available.

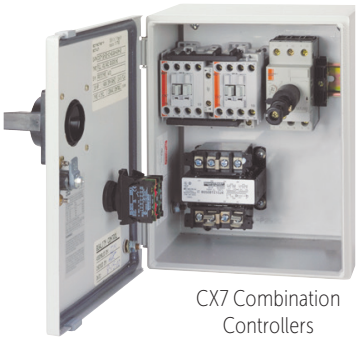

CX7 Combination Controllers
Page F4:19

Enclosed KTA9 - Type 4/4X/12K - IP66

Non-metallic Enclosure

Amp / Horsepower Rating							
Max. Horsepower ❶❷❸				O/L Relay Ampere Range	Magnetic Res. Current	Catalog Number ❹	Dimension Code
Three Phase							
200V	230V	460V	575V				
KTA9-32S Standard Interrupting Capacity							
~	~	~	~	0.10...0.16	2.2	**KTA9-32S-0.16A-CG**	AY
~	~	~	~	0.16...0.25	3.5	**KTA9-32S-0.25A-CG**	AY
~	~	~	~	0.25...0.40	5.6	**KTA9-32S-0.40A-CG**	AY
~	~	~	~	0.40...0.63	8.8	**KTA9-32S-0.63A-CG**	AY
~	~	1/2	1/2	0.63...1.0	14	**KTA9-32S-1.0A-CG**	AY
~	~	3/4	~	1.0...1.6	22	**KTA9-32S-1.6A-CG**	AY
1/2	1/2	1	1-1/2	1.6...2.5	35	**KTA9-32S-2.5A-CG**	AY
3/4	3/4	2	3	2.5...4.0	52	**KTA9-32S-4.0A-CG**	AY
1	1-1/2	3	5 ❻	4.0...6.3	88	**KTA9-32S-6.3A-CG**	AY
2	2	5	7-1/2 ❻	6.3...10	140	**KTA9-32S-10A-CG**	AY
3	5	10	10 ❻	10...16 ❼	224	**KTA9-32S-16A-CG**	AY

Includes:

- Non-metallic (Type 4/4X/12K - IP66) enclosure with integrated operator – watertight, dusttight
- KTA9-32S (Standard Interrupting Capacity) "Type E" Self-protected Combination Manual Controller ❺
- Terminal Adaptor for Type E Applications (Cat.# KT9-40-TE)
- Gray and black handle ❹❺

Modifications (Factory Assembled)

Description	Add Suffix to Cat. Number
KT9 Auxiliaries & Trip Contacts, Front Mount 250V max.	
1 NO Auxiliary	**-B**
1 NC Auxiliary	**-A**
1 NO + 1 NC Auxiliary	**-C**
2 NO Auxiliaries	**-D**
1 NO SC+OL + 1 NC Auxiliary	**-R**
1 NO SC+OL + 1 NO Auxiliary	**-S**
Side Mount 600V max.	
2 NC Auxiliaries	**-AS02**
2 NO Auxiliaries	**-AS20**
1 NO + 1 NC Auxiliary	**-AS11**
Accessories	
Undervoltage Release Module	**-UA✱**
Shunt Release Module	**-AA✱**

Enclosure Only - Type 4/4X/12K - IP66

Description	For use With	Catalog Number
Gray/Black handle	KTA9-32S up to 13A	**KT9-ENN**
Red/Yellow handle	KTA9-32S up to 13A	**KT9-ENRY**

❶ **Horsepower ratings shown in the table above are for reference.** ***The final selection of the controller depends on the actual motor full load current and service factor.***

- For motor with service factor less than 1.15. Use motor nameplate full load current times 0.9 and choose the motor starter with the appropriate current range. Example: Motor FLC = 4.2A; S.F. = 1.0. 4.2A x 0.9 = 3.78A. Select catalog number KTA9-32S-4.0A.

❷ Magnetic trip is fixed at 14x the maximum value of the current adjustment range. Refer to page F1:5 for applied KAIC ratings.

❸ KTA9 may be applied to single phase loads if 3 poles of device are wired in series. See footnote 1 for device selection criteria.

❹ A red and yellow handle may be selected instead of the standard gray and black handle. Change "CG" suffix to "CJ". Ex: Change KTA9-32S-0.16A-CG to KTA9-32S-0.16A-CJ.

❺ Handles are built-in to the enclosure and are not available as components.

❻ Catalog numbers with specific voltages (i.e. @ 575V) shaded in gray are suitable for use as a manual motor starter only because they are not Type E rated. See page F1:5 for ratings.

❼ This device is 30 kAIC approved up to 13 amps.

-UA..-AA Coil Codes (✱)

AC Coil Code	Voltage Range	
	50 Hz	60 Hz
24	24V	24V...28V
120	**110V**	**120V**
230	220...230V	~
260	~	240...260V
277	~	277V
400	380...400V	~
480	415V	480V

Enclosed KTA9 - Type 4 / 4X / 12

Non-metallic, Type 4 / 4X / 12 Enclosure

Amp / Horsepower Rating							
Max. Horsepower ❶❷				O/L Relay Ampere Range	Magnetic Res. Current	Catalog Number ❸	Dim Code
Three Phase							
200V	230V	460V	575V				
KTA9-32S Standard Interrupting Capacity							
~	~	~	~	0.10...0.16	2.2	**KTA9-32S-0.16A-VG**	Q5
~	~	~	~	0.16...0.25	3.5	**KTA9-32S-0.25A-VG**	Q5
~	~	~	~	0.25...0.40	5.6	**KTA9-32S-0.40A-VG**	Q5
~	~	~	~	0.40...0.63	8.8	**KTA9-32S-0.63A-VG**	Q5
~	~	1/2	1/2	0.63...1.0	14	**KTA9-32S-1.0A-VG**	Q5
~	~	3/4	~	1.0...1.6	22	**KTA9-32S-1.6A-VG**	Q5
1/2	1/2	1	1-1/2	1.6...2.5	35	**KTA9-32S-2.5A-VG**	Q5
3/4	3/4	2	3	2.5...4.0	52	**KTA9-32S-4.0A-VG**	Q5
1	1-1/2	3	5 ❹	4.0...6.3	88	**KTA9-32S-6.3A-VG ❹**	Q5
2	2	5	7-1/2 ❹	6.3...10	140	**KTA9-32S-10A-VG ❹**	Q5
3	5	10	10 ❹	10...16	224	**KTA9-32S-16A-VG ❹**	Q5
5 ❹	5 ❹	10 ❹	15 ❹	14.5...20	280	**KTA9-32S-20A-VG ❹**	Q5
5 ❹	7-1/2 ❹	15 ❹	20 ❹	18...25	330	**KTA9-32S-25A-VG ❹**	Q5
7-1/2 ❹	10 ❹	20 ❹	25 ❹	23...29	406	**KTA9-32S-29A-VG ❹**	Q5
7-1/2 ❹	10 ❹	20 ❹	30 ❹	26.5...32	448	**KTA9-32S-32A-VG ❹**	Q5
KTA9-40H High Interrupting Capacity							
~	~	~	~	0.40...0.63	8.8	**KTA9-40H-0.63A-VG**	Q6
~	~	1/2	1/2	0.63...1.0	14	**KTA9-40H-1.0A-VG**	Q6
~	~	3/4	~	1.0...1.6	22	**KTA9-40H-1.6A-VG**	Q6
1/2	1/2	1	1-1/2	1.6...2.5	33	**KTA9-40H-2.5A-VG**	Q6
3/4	3/4	2	3	2.5...4.0	52	**KTA9-40H-4.0A-VG**	Q6
1	1-1/2	3	5	4.0...6.3	82	**KTA9-40H-6.3A-VG**	Q6
2	2	5	7-1/2	6.3...10	130	**KTA9-40H-10A-VG**	Q6
3	5	10	10	10...16	208	**KTA9-40H-16A-VG**	Q6
5	5	10	15 ❹	14.5...20	260	**KTA9-40H-20A-VG ❹**	Q6
5	7-1/2	15	20 ❹	18...25	325	**KTA9-40H-25A-VG ❹**	Q6
7-1/2	10	20	25 ❹	23...29	406	**KTA9-40H-29A-VG ❹**	Q6
7-1/2	10	20	30 ❹	26.5...32	448	**KTA9-40H-32A-VG ❹**	Q6
10	10	25	30 ❹	30...36	432	**KTA9-40H-36A-VG ❹**	Q6
10	10	30	30 ❹	34...40	480	**KTA9-40H-40A-VG ❹**	Q6
KTA7-45H High Interrupting Capacity							
2	3	5	7-1/2	6.3...10	130	**KTA7-45H-10A-VG**	Q7
3	5	10	10	10...16	208	**KTA7-45H-16A-VG**	Q7
5	5	10	15	14.5...20	260	**KTA7-45H-20A-VG**	Q7
7-1/2	7-1/2	15	20	18...25	325	**KTA7-45H-25A-VG**	Q7
7-1/2	10	20	30	23...32	416	**KTA7-45H-32A-VG**	Q7
10	15	30	40 ❹	32...45	585	**KTA7-45H-45A-VG**	Q7

Includes:

- Type 4 / 4X / 12 enclosure – watertight, dusttight, corrosion resistant
- KTA9 "Type E" Self-protected Combination Manual Controller (Standard Interrupting Capacity) ❺
- Terminal Adaptor for Type E Applications (Cat.# KT9-40-TE or KT7-45-TE)
- Gray and black Type 4/4X/12; IP66 handle (Cat.# KT9-HTN) ❹

Modifications (Factory Assembled)

Description	Add Suffix to Cat. Number
KT9 Auxiliaries & Trip Contacts, Front Mount 250V max.	
1 NO Auxiliary	**-B**
1 NC Auxiliary	**-A**
1 NO + 1 NC Auxiliary	**-C**
2 NO Auxiliaries	**-D**
1 NO SC+OL + 1 NC	**-R**
1 NO SC+OL + 1 NO	**-S**
Side Mount 600V max.	
2 NC Auxiliaries	**-AS02**
2 NO Auxiliaries	**-AS20**
1 NO + 1 NC Auxiliary	**-AS11**
Accessories	
Undervoltage Release Module	**-UA✱**
Shunt Release Module	**-AA✱**

-UA..-AA Coil Codes (✱)

AC Coil Code	Voltage Range	
	50 Hz	60 Hz
24	24V	24V...28V
120	**110V**	**120V**
230	220...230V	~
260	~	240...260V
277	~	277V
400	380...400V	~
480	415V	480V

❶ **Horsepower ratings shown in the table above are for reference.** ***The final selection of the controller depends on the actual motor full load current and service factor.***

- For motor with service factor less than 1.15. Use motor nameplate full load current times 0.9 and choose the motor starter with the appropriate current range. Example: Motor FLC = 4.2A; S.F. = 1.0. 4.2A x 0.9 = 3.78A. Select catalog number KTA9-32S-4.0A.

❷ KTA9 may be applied to single phase loads if 3 poles of device are wired in series. See footnote 1 for device selection criteria.

❸ A red and yellow handle may be selected instead of the standard gray and black handle. Change "VG" suffix to "VJ". Ex: Change KTA9-32S-0.16-**VG** to KTA9-32S-0.16-**VJ**.

❹ Catalog numbers with specific voltages (i.e. @ 575V) shaded in gray are suitable for use as a manual motor starter only because they are not Type E rated. See page F1:5 for ratings.

Enclosed KTA9 - Type 12

Painted Steel, Type 12 Enclosure

Amp / Horsepower Rating							
Max. Horsepower ❶❷❸				O/L Relay Ampere Range	Magnetic Res. Current	Catalog Number ❹	Dim Code
Three Phase							
200V	230V	460V	575V				
KTA9-32S Standard Interrupting Capacity							
~	~	~	~	0.10...0.16	2.2	**KTA9-32S-0.16A-DG**	L
~	~	~	~	0.16...0.25	3.5	**KTA9-32S-0.25A-DG**	L
~	~	~	~	0.25...0.40	5.6	**KTA9-32S-0.40A-DG**	L
~	~	~	~	0.40...0.63	8.8	**KTA9-32S-0.63A-DG**	L
~	~	1/2	1/2	0.63...1.0	14	**KTA9-32S-1.0A-DG**	L
~	~	3/4	~	1.0...1.6	22	**KTA9-32S-1.6A-DG**	L
1/2	1/2	1	1-1/2	1.6...2.5	35	**KTA9-32S-2.5A-DG**	L
3/4	3/4	2	3	2.5...4.0	52	**KTA9-32S-4.0A-DG**	L
1	1-1/2	3	5 ❹	4.0...6.3	88	**KTA9-32S-6.3A-DG ❹**	L
2	2	5	7-1/2 ❹	6.3...10	140	**KTA9-32S-10A-DG ❹**	L
3	5	10	10 ❹	10...16	224	**KTA9-32S-16A-DG ❹**	L
5 ❹	5 ❹	10 ❹	15 ❹	14.5...20	280	**KTA9-32S-20A-DG ❹**	L
5 ❹	7-1/2 ❹	15 ❹	20 ❹	18...25	330	**KTA9-32S-25A-DG ❹**	L
7-1/2 ❹	10 ❹	20 ❹	25 ❹	23...29	406	**KTA9-32S-29A-DG ❹**	L
7-1/2 ❹	10 ❹	20 ❹	30 ❹	26.5...32	448	**KTA9-32S-32A-DG ❹**	L
KTA9-40H High Interrupting Capacity							
~	~	~	~	0.40...0.63	8.8	**KTA9-40H-0.63A-DG**	L
~	~	1/2	1/2	0.63...1.0	14	**KTA9-40H-1.0A-DG**	L
~	~	3/4	~	1.0...1.6	22	**KTA9-40H-1.6A-DG**	L
1/2	1/2	1	1-1/2	1.6...2.5	33	**KTA9-40H-2.5A-DG**	L
3/4	3/4	2	3	2.5...4.0	52	**KTA9-40H-4.0A-DG**	L
1	1-1/2	3	5	4.0...6.3	82	**KTA9-40H-6.3A-DG**	L
2	2	5	7-1/2	6.3...10	130	**KTA9-40H-10A-DG**	L
3	5	10	10	10...16	208	**KTA9-40H-16A-DG**	L
5	5	10	15 ❹	14.5...20	260	**KTA9-40H-20A-DG ❹**	L
5	7-1/2	15	20 ❹	18...25	325	**KTA9-40H-25A-DG ❹**	L
7-1/2	10	20	25 ❹	23...29	406	**KTA9-40H-29A-DG ❹**	L
7-1/2	10	20	30 ❹	26.5...32	448	**KTA9-40H-32A-DG ❹**	L
10	10	25	30 ❹	30...36	432	**KTA9-40H-36A-DG ❹**	L
10	10	30	30 ❹	34...40	480	**KTA9-40H-40A-DG ❹**	L

Includes:

- Type 12 enclosure – dusttight
- KTA9 "Type E" Self-protected Combination Manual Controller ❺
- Terminal Adaptor for Type E Applications (Cat.# KT9-40-TE)
- Gray and black Type 4/4X/12; IP66 handle (Cat.# KT9-HTN) ❹

Modifications (Factory Assembled)

Description	Add Suffix to Cat. Number
KT9 Auxiliaries & Trip Contacts, Front Mount 250V max.	
1 NO Auxiliary	**-B**
1 NC Auxiliary	**-A**
1 NO + 1 NC Auxiliary	**-C**
2 NO Auxiliaries	**-D**
1 NO SC+OL + 1 NC	**-R**
1 NO SC+OL + 1 NO	**-S**
Side Mount 600V max.	
2 NC Auxiliaries	**-AS02**
2 NO Auxiliaries	**-AS20**
1 NO + 1 NC Auxiliary	**-AS11**
Accessories	
Undervoltage Release Module	**-UA✱**
Shunt Release Module	**-AA✱**

-UA..-AA Coil Codes (✱)

AC Coil Code	Voltage Range	
	50 Hz	60 Hz
24	24V	24V...28V
120	**110V**	**120V**
230	220...230V	~
260	~	240...260V
277	~	277V
400	380...400V	~
480	415V	480V

❶ **Horsepower ratings shown in the table above are for reference.** ***The final selection of the controller depends on the actual motor full load current and service factor.***

- For motor with service factor less than 1.15. Use motor nameplate full load current times 0.9 and choose the motor starter with the appropriate current range. Example: Motor FLC = 4.2A; S.F. = 1.0. 4.2A x 0.9 = 3.78A. Select catalog number KTA9-32S-4.0A.

❷ KTA9 may be applied to single phase loads if 3 poles of device are wired in series. See footnote 1 for device selection criteria.

❸ A red and yellow handle may be selected instead of the standard gray and black handle. Change "DG" suffix to "DJ". Ex: Change KTA9-32S-0.16-DG to KTA9-32S-0.16-**DJ**.

❹ Catalog numbers with specific voltages (i.e. @ 575V) shaded in gray are suitable for use as a manual motor starter only because they are not Type E rated. See page F1:5 for ratings.

Enclosed KTA9 - Type 4 / 12

Painted Steel, Type 4 / 12 Enclosure

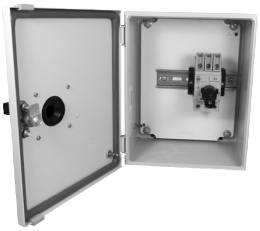

Amp / Horsepower Rating							
Max. Horsepower ❶❷				O/L Relay Ampere Range	Magnetic Res. Current	Catalog Number ❸	Dim Code
Three Phase							
200V	230V	460V	575V				
KTA9-32S Standard Interrupting Capacity							
~	~	~	~	0.10...0.16	2.2	**KTA9-32S-0.16A-WG**	W6
~	~	~	~	0.16...0.25	3.5	**KTA9-32S-0.25A-WG**	W6
~	~	~	~	0.25...0.40	5.6	**KTA9-32S-0.40A-WG**	W6
~	~	~	~	0.40...0.63	8.8	**KTA9-32S-0.63A-WG**	W6
~	~	1/2	1/2	0.63...1.0	14	**KTA9-32S-1.0A-WG**	W6
~	~	3/4	~	1.0...1.6	22	**KTA9-32S-1.6A-WG**	W6
1/2	1/2	1	1-1/2	1.6...2.5	35	**KTA9-32S-2.5A-WG**	W6
3/4	3/4	2	3	2.5...4.0	52	**KTA9-32S-4.0A-WG**	W6
1	1-1/2	3	5 ❹	4.0...6.3	88	**KTA9-32S-6.3A-WG ❹**	W6
2	2	5	7-1/2 ❹	6.3...10	140	**KTA9-32S-10A-WG ❹**	W6
3	5	10	10 ❹	10...16	224	**KTA9-32S-16A-WG ❹**	W6
5 ❹	5 ❹	10 ❹	15 ❹	14.5...20	280	**KTA9-32S-20A-WG ❹**	W6
5 ❹	7-1/2 ❹	15 ❹	20 ❹	18...25	330	**KTA9-32S-25A-WG ❹**	W6
7-1/2 ❹	10 ❹	20 ❹	25 ❹	23...29	406	**KTA9-32S-29A-WG ❹**	W6
7-1/2 ❹	10 ❹	20 ❹	30 ❹	26.5...32	448	**KTA9-32S-32A-WG ❹**	W6
KTA9-40H High Interrupting Capacity							
~	~	~	~	0.40...0.63	8.8	**KTA9-40H-0.63A-WG**	W6
~	~	1/2	1/2	0.63...1.0	14	**KTA9-40H-1.0A-WG**	W6
~	~	3/4	~	1.0...1.6	22	**KTA9-40H-1.6A-WG**	W6
1/2	1/2	1	1-1/2	1.6...2.5	33	**KTA9-40H-2.5A-WG**	W6
3/4	3/4	2	3	2.5...4.0	52	**KTA9-40H-4.0A-WG**	W6
1	1-1/2	3	5	4.0...6.3	82	**KTA9-40H-6.3A-WG**	W6
2	2	5	7-1/2	6.3...10	130	**KTA9-40H-10A-WG**	W6
3	5	10	10	10...16	208	**KTA9-40H-16A-WG**	W6
5	5	10	15 ❹	14.5...20	260	**KTA9-40H-20A-WG ❹**	W6
5	7-1/2	15	20 ❹	18...25	325	**KTA9-40H-25A-WG ❹**	W6
7-1/2	10	20	25 ❹	23...29	406	**KTA9-40H-29A-WG❹**	W6
7-1/2	10	20	30 ❹	26.5...32	448	**KTA9-40H-32A-WG❹**	W6
10	10	25	30 ❹	30...36	432	**KTA9-40H-36A-WG ❹**	W6
10	10	30	30 ❹	34...40	480	**KTA9-40H-40A-WG ❹**	W6
KTA7-45H High Interrupting Capacity							
2	3	5	7-1/2	6.3...10	130	**KTA7-45H-10A-WG**	R/F
3	5	10	10	10...16	208	**KTA7-45H-16A-WG**	R/F
5	5	10	15	14.5...20	260	**KTA7-45H-20A-WG**	R/F
7-1/2	7-1/2	15	20	18...25	325	**KTA7-45H-25A-WG**	R/F
7-1/2	10	20	30	23...32	416	**KTA7-45H-32A-WG**	R/F
10	15	30	40 ❹	32...45	585	**KTA7-45H-45A-WG ❹**	R/F

Includes:

- Type 4 / 12 enclosure – watertight, dusttight
- KTA9 "Type E" Self-protected Combination Manual Controller ❹
- Terminal Adaptor for Type E Applications (Cat.# KT9-40-TE or KT7-45-TE)
- Gray and black Type 4/4X/12; IP66 handle (Cat.# KT9-HTN) ❸

Modifications (Factory Assembled)

Description	Add Suffix to Cat. Number
KT9 Auxiliaries & Trip Contacts, Front Mount 250V max.	
1 NO Auxiliary	**-B**
1 NC Auxiliary	**-A**
1 NO + 1 NC Auxiliary	**-C**
2 NO Auxiliaries	**-D**
1 NO SC+OL + 1 NC	**-R**
1 NO SC+OL + 1 NO	**-S**
Side Mount 600V max.	
2 NC Auxiliaries	**-AS02**
2 NO Auxiliaries	**-AS20**
1 NO + 1 NC Auxiliary	**-AS11**
Accessories	
Undervoltage Release Module	**-UA✱**
Shunt Release Module	**-AA✱**

-UA..-AA Coil Codes (✱)

AC Coil Code	Voltage Range	
	50 Hz	60 Hz
24	24V	24V...28V
120	**110V**	**120V**
230	220...230V	~
260	~	240...260V
277	~	277V
400	380...400V	~
480	415V	480V

❶ **Horsepower ratings shown in the table above are for reference.** ***The final selection of the controller depends on the actual motor full load current and service factor.***

- For motor with service factor less than 1.15. Use motor nameplate full load current times 0.9 and choose the motor starter with the appropriate current range. Example: Motor FLC = 4.2A; S.F. = 1.0. 4.2A x 0.9 = 3.78A. Select catalog number KTA9-32S-4.0A.

❷ KTA9 may be applied to single phase loads if 3 poles of device are wired in series. See footnote 1 for device selection criteria.

❸ A red and yellow handle may be selected instead of the standard gray and black handle. Change "WG" suffix to "WJ". Ex: Change KTA9-32S-0.16-WG to KTA9-32S-0.16-**WJ**.

❹ Catalog numbers with specific voltages (i.e. @ 575V) shaded in gray are suitable for use as a manual motor starter only because they are not Type E rated. See page F1:5 for ratings.

KTA9 Explosion Proof Motor Controllers - NEMA Type 7/9

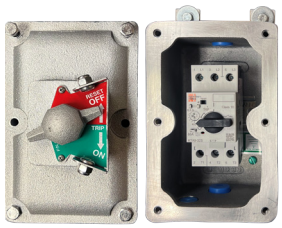

Amp / Horsepower Rating							
Max. Horsepower ❶❷ Three Phase				O/L Relay Ampere Range	Magnetic Res. Current	Catalog Number	Dim Code
200V	230V	460V	575V				
KTA9-32S Standard Interrupting Capacity							
~	~	~	~	0.10...0.16	2.2	**KTA9-32S-0.16A-EX**	EX
~	~	~	~	0.16...0.25	3.5	**KTA9-32S-0.25A-EX**	EX
~	~	~	~	0.25...0.40	5.6	**KTA9-32S-0.40A-EX**	EX
~	~	~	~	0.40...0.63	8.8	**KTA9-32S-0.63A-EX**	EX
~	~	1/2	1/2	0.63...1.0	14	**KTA9-32S-1.0A-EX**	EX
~	~	3/4	~	1.0...1.6	22	**KTA9-32S-1.6A-EX**	EX
1/2	1/2	1	1-1/2	1.6...2.5	35	**KTA9-32S-2.5A-EX**	EX
3/4	3/4	2	3	2.5...4.0	52	**KTA9-32S-4.0A-EX**	EX
1	1-1/2	3	5 ❸	4.0...6.3	88	**KTA9-32S-6.3A-EX ❸**	EX
2	2	5	7-1/2 ❸	6.3...10	140	**KTA9-32S-10A-EX ❸**	EX
3	5	10	10 ❸	10...16	224	**KTA9-32S-16A-EX ❸**	EX

Includes:

- Class I, Div 1, 2, Group C, D
  Class II, Div 1, 2, Group E, F & G enclosure
  Class III
  NEMA Type 7/9
- KTA9 "Type E" Self-protected Combination Manual Motor Controller ❸
- Terminal Adaptor for Type E Applications (Cat.# KT9-40-TE)

Modifications (Factory Assembled)

Description	Add Suffix to Cat. Number
KT9 Auxiliaries & Trip Contacts, Front Mount 250V max.	
1 NO Auxiliary	**-B**
1 NC Auxiliary	**-A**
1 NO + 1 NC Auxiliary	**-C**
2 NO Auxiliaries	**-D**
1 NO SC+OL + 1 NC	**-R**
1 NO SC+OL + 1 NO	**-S**
Side Mount 600V max.	
2 NC Auxiliaries	**-AS02**
2 NO Auxiliaries	**-AS20**
1 NO + 1 NC Auxiliary	**-AS11**
Additional KT9 Trip Contacts Side Mounts 600V max.	
1 NO SC+OL+1 NO SC	**-R00**
1 NO SC+OL+1 NC SC	**-RO1**
1 NC SC+OL+1 NO SC	**-R10**
Enclosure Modifications	
Breather/Drain	**-BD**

❶ **Horsepower ratings shown in the table above are for reference.** ***The final selection of the controller depends on the actual motor full load current and service factor.***

- For motor with service factor less than 1.15. Use motor nameplate full load current times 0.9 and choose the motor starter with the appropriate current range. Example: Motor FLC = 4.2A; S.F. = 1.0. 4.2A x 0.9 = 3.78A. Select catalog number KTA9-32S-4.0A.

❷ KTA9 may be applied to single phase loads if 3 poles of device are wired in series. See footnote 1 for device selection criteria.

❸ Catalog numbers with specific voltages (i.e. @ 575V) shaded in gray are suitable for use as a manual motor starter only because they are not Type E rated. See page F1:5 for ratings.

❹ -UA✱ and -AA✱ options not possible in the -EX Enclosure.

KTA9 Explosion Proof Motor Controllers – NEMA Type 4/7/9 with Gasket

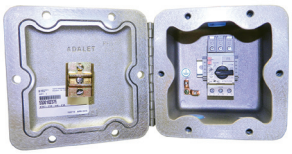

EY Enclosure shown

Amp / Horsepower Rating							
Max. Horsepower ❶❷ Three Phase				O/L Relay Ampere Range	Magnetic Res. Current	Catalog Number ❸	Dim Code
200V	230V	460V	575V				
KTA9-32S Standard Interrupting Capacity							
~	~	~	~	0.10...0.16	2.2	**KTA9-32S-0.16A-EY**	EY
~	~	~	~	0.16...0.25	3.5	**KTA9-32S-0.25A-EY**	EY
~	~	~	~	0.25...0.40	5.6	**KTA9-32S-0.40A-EY**	EY
~	~	~	~	0.40...0.63	8.8	**KTA9-32S-0.63A-EY**	EY
~	~	1/2	1/2	0.63...1.0	14	**KTA9-32S-1.0A-EY**	EY
~	~	3/4	~	1.0...1.6	22	**KTA9-32S-1.6A-EY**	EY
1/2	1/2	1	1-1/2	1.6...2.5	35	**KTA9-32S-2.5A-EY**	EY
3/4	3/4	2	3	2.5...4.0	52	**KTA9-32S-4.0A-EY**	EY
1	1-1/2	3	5 ❸	4.0...6.3	88	**KTA9-32S-6.3A-EY**	EY
2	2	5	7-1/2 ❸	6.3...10	140	**KTA9-32S-10A-EY**	EY
3	5	10	10 ❸	10...16	224	**KTA9-32S-16A-EY**	EY
5 ❸	5 ❸	10 ❸	15 ❸	14.5...20	280	**KTA9-32S-20A-EY**	EY
5 ❸	7-1/2 ❸	15 ❸	20 ❸	18...25	330	**KTA9-32S-25A-EY**	EY
7-1/2 ❸	10 ❸	20 ❸	25 ❸	23...29	406	**KTA9-32S-29A-EY**	EY
7-1/2 ❸	10 ❸	20 ❸	30 ❸	26.5...32	448	**KTA9-32S-32A-EY**	EY
KTA9-40H High Interrupting Capacity							
~	~	~	~	0.40...0.63	8.8	**KTA9-40H-0.63A-EY**	EY
~	~	1/2	1/2	0.63...1.0	14	**KTA9-40H-1.0A-EY**	EY
~	~	3/4	~	1.0...1.6	22	**KTA9-40H-1.6A-EY**	EY
1/2	1/2	1	1-1/2	1.6...2.5	33	**KTA9-40H-2.5A-EY**	EY
3/4	3/4	2	3	2.5...4.0	52	**KTA9-40H-4.0A-EY**	EY
1	1-1/2	3	5	4.0...6.3	82	**KTA9-40H-6.3A-EY**	EY
2	2	5	7-1/2	6.3...10	130	**KTA9-40H-10A-EY**	EY
3	5	10	10	10...16	208	**KTA9-40H-16A-EY**	EY
5	5	10	15 ❸	14.5...20	260	**KTA9-40H-20A-EY**	EY
5	7-1/2	15	20 ❸	18...25	325	**KTA9-40H-25A-EY**	EY
7-1/2	10	20	25 ❸	23...29	406	**KTA9-40H-29A-EY**	EY
7-1/2	10	20	30 ❸	26.5...32	448	**KTA9-40H-32A-EY**	EY
10	10	25	30 ❸	30...36	432	**KTA9-40H-36A-EY**	EY
10	10	30	30 ❸	34...40	480	**KTA9-40H-40A-EY**	EY
KTA7-45H High Interrupting Capacity							
2	3	5	7-1/2	6.3...10	130	**KTA7-45H-10A-EZ**	EZ
3	5	10	10	10...16	208	**KTA7-45H-16A-EZ**	EZ
5	5	10	15	14.5...20	260	**KTA7-45H-20A-EZ**	EZ
7-1/2	7-1/2	15	20	18...25	325	**KTA7-45H-25A-EZ**	EZ
7-1/2	10	20	30	23...32	416	**KTA7-45H-32A-EZ**	EZ
10	15	30	40 ❸	32...45	585	**KTA7-45H-45A-EZ**	EZ

Includes:

- Class I, Div 1, 2, Group C, D
  Class II, Div 1, 2, Group E, F & G enclosure
  Class III
- NEMA Type 4/7/9
- KTA9 "Type E" Self-protected Combination Manual Motor Controller ❸
- Terminal Adaptor for Type E Applications
  (Cat.# KT9-40-TE or KT7-45-TE)

Modifications (Factory Assembled)

Description	Add Suffix to Cat. Number
KT9 Auxiliaries & Trip Contacts, Front Mount 250V max.	
1 NO Auxiliary	**-B**
1 NC Auxiliary	**-A**
1 NO + 1 NC Auxiliary	**-C**
2 NO Auxiliaries	**-D**
1 NO SC+OL + 1 NC	**-R**
1 NO SC+OL + 1 NO	**-S**
Side Mount 600V max.	
2 NC Auxiliaries	**-AS02**
2 NO Auxiliaries	**-AS20**
1 NO + 1 NC Auxiliary	**-AS11**
Accessories	
Undervoltage Release Module	**-UA✱**
Shunt Release Module	**-AA✱**
Enclosure Modifications	
Breather/Drain	**-BD**

-UA..-AA Coil Codes (✱)

AC Coil Code	Voltage Range 50 Hz	Voltage Range 60 Hz
24	24V	24V...28V
120	**110V**	**120V**
230	220...230V	~
260	~	240...260V
277	~	277V
400	380...400V	~
480	415V	480V

❶ **Horsepower ratings shown in the table above are for reference.** ***The final selection of the controller depends on the actual motor full load current and service factor.***

- For motor with service factor less than 1.15. Use motor nameplate full load current times 0.9 and choose the motor starter with the appropriate current range. Example: Motor FLC = 4.2A; S.F. = 1.0. 4.2A x 0.9 = 3.78A. Select catalog number KTA9-32S-4.0A.

❷ KTA9 may be applied to single phase loads if 3 poles of device are wired in series. See footnote ❶ for device selection criteria.

❸ Catalog numbers with specific voltages (i.e. @ 575V) shaded in gray are suitable for use as a manual motor starter only because they are not Type E rated. See page F1:5 for ratings.

Enclosed KTU9 Circuit Breaker - Type 4 / 4X / 12

Amp / Interrupt Rating					Non-metallic, Type 4 / 4X / 12 Enclosure	
❶ Fixed Thermal Current Rating [A]	Magnetic Trip [A]	Interrupting Rating (60Hz) [KA] 240V	480Y /277V	600Y /347V	Catalog Number	Dimension Code
KTU9-D — High Interrupting Capacity – 2-Pole						
0.5	15...20xI_n	100	100	50	**KTU9-40H-2D-0.5-VG**	Q6 ❶
1.0	15...20xI_n	100	100	50	**KTU9-40H-2D-1-VG**	
2.0	15...20xI_n	100	100	50	**KTU9-40H-2D-2-VG**	
3.0	15...20xI_n	100	100	50	**KTU9-40H-2D-3-VG**	
4.0	15...20xI_n	100	100	50	**KTU9-40H-2D-4-VG**	
5.0	15...20xI_n	100	100	50	**KTU9-40H-2D-5-VG**	
6.0	15...20xI_n	100	100	50	**KTU9-40H-2D-6-VG**	
8.0	15...20xI_n	100	100	50	**KTU9-40H-2D-8-VG**	
10.0	15...20xI_n	100	100	50	**KTU9-40H-2D-10-VG**	
12.0	15...20xI_n	65	65	25	**KTU9-40H-2D-12-VG**	
15.0	15...20xI_n	65	65	25	**KTU9-40H-2D-15-VG**	
20.0	15...20xI_n	65	65	~	**KTU9-40H-2D-20-VG**	
25.0	15...20xI_n	65	65	~	**KTU9-40H-2D-25-VG**	
30.0	15...20xI_n	65	65	~	**KTU9-40H-2D-30-VG**	
35.0	14 x I_n	65	65	~	**KTU9-40H-2D-35-VG**	
40.0	12 x I_n	65	65	~	**KTU9-40H-2D-40-VG**	
KTU9-D — High Interrupting Capacity – 3-Pole						
0.5	15...20xI_n	100	100	50	**KTU9-40H-3D-0.5-VG**	Q6 ❶
1.0	15...20xI_n	100	100	50	**KTU9-40H-3D-1-VG**	
2.0	15...20xI_n	100	100	50	**KTU9-40H-3D-2-VG**	
3.0	15...20xI_n	100	100	50	**KTU9-40H-3D-3-VG**	
4.0	15...20xI_n	100	100	50	**KTU9-40H-3D-4-VG**	
5.0	15...20xI_n	100	100	50	**KTU9-40H-3D-5-VG**	
6.0	15...20xI_n	100	100	50	**KTU9-40H-3D-6-VG**	
8.0	15...20xI_n	100	100	50	**KTU9-40H-3D-8-VG**	
10.0	15...20xI_n	100	100	50	**KTU9-40H-3D-10-VG**	
12.0	15...20xI_n	65	65	25	**KTU9-40H-3D-12-VG**	
15.0	15...20xI_n	65	65	25	**KTU9-40H-3D-15-VG**	
20.0	15...20xI_n	65	65	~	**KTU9-40H-3D-20-VG**	
25.0	15...20xI_n	65	65	~	**KTU9-40H-3D-25-VG**	
30.0	15...20xI_n	65	65	~	**KTU9-40H-3D-30-VG**	
35.0	14 x I_n	65	65	~	**KTU9-40H-3D-35-VG**	
40.0	12 x I_n	65	65	~	**KTU9-40H-3D-40-VG**	

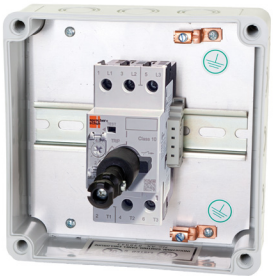

Includes:

- Type 4 / 4X / 12 enclosure – watertight, dusttight, corrosion resistant
- KTU9 UL489 Molded Case Circuit Breaker
- Black Type 4/4X/12; IP66 handle (Cat.# KT9-HTN Series E) ❷

Modifications (Factory Assembled) ❸

KT9 Auxiliaries & Trip Contacts - Front Mount 250V max.	Add Suffix to Cat. Number
1 NO Auxiliary	**-B**
1 NC Auxiliary	**-A**
1 NO + 1 NC Auxiliary	**-C**
2 NO Auxiliaries	**-D**
1 NO SC+OL + 1 NC Auxiliary	**-R**
1 NO SC+OL + 1 NO Auxiliary	**-S**

❶ KTU9 is 80% rated in this enclosure.
❷ A red and yellow handle may be selected instead of the standard black handle. Change "VG" suffix to "VJ". Ex: Change KTU9-40H-2D-0.16-VG to KTU9-40H-2D-0.16-VJ.
❸ Load Terminal Cover KT9-PEFC is included with any factory modifications.

Enclosed KTU9 Circuit Breaker - Type 12

Amp / Interrupt Rating

Painted Steel, Type 12 Enclosure

❶ Fixed Thermal Current Rating [A]	Magnetic Trip [A]	Interrupting Rating (60Hz) [KA] 240V	480Y /277V	600Y /347V	Catalog Number	Dim Code
KTU9-40H-2D — High Interrupting Capacity – 2-Pole						
0.5	15...20xI_n	100	100	50	**KTU9-40H-2D-0.5-DG**	L ❶
1.0	15...20xI_n	100	100	50	**KTU9-40H-2D-1-DG**	
2.0	15...20xI_n	100	100	50	**KTU9-40H-2D-2-DG**	
3.0	15...20xI_n	100	100	50	**KTU9-40H-2D-3-DG**	
4.0	15...20xI_n	100	100	50	**KTU9-40H-2D-4-DG**	
5.0	15...20xI_n	100	100	50	**KTU9-40H-2D-5-DG**	
6.0	15...20xI_n	100	100	50	**KTU9-40H-2D-6-DG**	
8.0	15...20xI_n	100	100	50	**KTU9-40H-2D-8-DG**	
10.0	15...20xI_n	100	100	50	**KTU9-40H-2D-10-DG**	
12.0	15...20xI_n	65	65	25	**KTU9-40H-2D-12-DG**	
15.0	15...20xI_n	65	65	25	**KTU9-40H-2D-15-DG**	
20.0	15...20xI_n	65	65	~	**KTU9-40H-2D-20-DG**	
25.0	15...20xI_n	65	65	~	**KTU9-40H-2D-25-DG**	
30.0	15...20xI_n	65	65	~	**KTU9-40H-2D-30-DG**	
35.0	14 x I_n	65	65	~	**KTU9-40H-2D-35-DG**	
40.0	12 x I_n	65	65	~	**KTU9-40H-2D-40-DG**	
KTU9-40H-3D — High Interrupting Capacity – 3-Pole						
0.5	15...20xI_n	100	100	50	**KTU9-40H-3D-0.5-DG**	L ❶
1.0	15...20xI_n	100	100	50	**KTU9-40H-3D-1-DG**	
2.0	15...20xI_n	100	100	50	**KTU9-40H-3D-2-DG**	
3.0	15...20xI_n	100	100	50	**KTU9-40H-3D-3-DG**	
4.0	15...20xI_n	100	100	50	**KTU9-40H-3D-4-DG**	
5.0	15...20xI_n	100	100	50	**KTU9-40H-3D-5-DG**	
6.0	15...20xI_n	100	100	50	**KTU9-40H-3D-6-DG**	
8.0	15...20xI_n	100	100	50	**KTU9-40H-3D-8-DG**	
10.0	15...20xI_n	100	100	50	**KTU9-40H-3D-10-DG**	
12.0	15...20xI_n	65	65	25	**KTU9-40H-3D-12-DG**	
15.0	15...20xI_n	65	65	25	**KTU9-40H-3D-15-DG**	
20.0	15...20xI_n	65	65	~	**KTU9-40H-3D-20-DG**	
25.0	15...20xI_n	65	65	~	**KTU9-40H-3D-25-DG**	
30.0	15...20xI_n	65	65	~	**KTU9-40H-3D-30-DG**	
35.0	14 x I_n	65	65	~	**KTU9-40H-3D-35-DG**	
40.0	12 x I_n	65	65	~	**KTU9-40H-3D-40-DG**	

Includes:

- Type 12 enclosure – dusttight
- KTU9 UL489 Molded Case Circuit Breaker
- Black Type 4/4X/12; IP66 handle (Cat.# KT9-HTN) ❷

Modifications (Factory Assembled) ❸

KT9 Auxiliaries & Trip Contacts - Front Mount 250V max.	Add Suffix to Cat. Number
1 NO Auxiliary	**-B**
1 NC Auxiliary	**-A**
1 NO + 1 NC Auxiliary	**-C**
2 NO Auxiliaries	**-D**
1 NO SC+OL + 1 NC Auxiliary	**-R**
1 NO SC+OL + 1 NO Auxiliary	**-S**

❶ KTU9 is 80% rated in this enclosure.
❷ A red and yellow handle may be selected instead of the standard black handle. Change "DG" suffix to "DJ". Ex: Change KTU9-40H-2D-0.16-**DG** to KTU9-D-2D-0.16-**DJ**.
❸ Load Terminal Cover KT9-PEFC is included with any factory modifications.

Enclosed KTU9 Circuit Breaker - Type 4 / 12

Amp / Interrupt Rating

Painted Steel, Type 4 / 12 Enclosure

❶ Fixed Thermal Current Rating [A]	Magnetic Trip [A]	Interrupting Rating (60Hz) [KA] 240V	480Y /277V	600Y /347V	Catalog Number	Dimension Code
KTU9-40H-2D — High Interrupting Capacity – 2-Pole						
0.5	15...20xI_n	100	100	50	**KTU9-40H-2D-0.5-WG**	W6 ❶
1.0	15...20xI_n	100	100	50	**KTU9-40H-2D-1-WG**	
2.0	15...20xI_n	100	100	50	**KTU9-40H-2D-2-WG**	
3.0	15...20xIn	100	100	50	**KTU9-40H-2D-3-WG**	
4.0	15...20xI_n	100	100	50	**KTU9-40H-2D-4-WG**	
5.0	15...20xI_n	100	100	50	**KTU9-40H-2D-5-WG**	
6.0	15...20xI_n	100	100	50	**KTU9-40H-2D-6-WG**	
8.0	15...20xI_n	100	100	50	**KTU9-40H-2D-8-WG**	
10.0	15...20xI_n	100	100	50	**KTU9-40H-2D-10-WG**	
12.0	15...20xI_n	65	65	25	**KTU9-40H-2D-12-WG**	
15.0	15...20xI_n	65	65	25	**KTU9-40H-2D-15-WG**	
20.0	15...20xI_n	65	65	~	**KTU9-40H-2D-20-WG**	
25.0	15...20xI_n	65	65	~	**KTU9-40H-2D-25-WG**	
30.0	15...20xI_n	65	65	~	**KTU9-40H-2D-30-WG**	
35.0	14 x I_n	65	65	~	**KTU9-40H-2D-35-WG**	
40.0	12 x I_n	65	65	~	**KTU9-40H-2D-40-WG**	
KTU9-40H-3D — High Interrupting Capacity – 3-Pole						
0.5	15...20xI_n	100	100	50	**KTU9-40H-3D-0.5-WG**	W6 ❶
1.0	15...20xI_n	100	100	50	**KTU9-40H-3D-1-WG**	
2.0	15...20xI_n	100	100	50	**KTU9-40H-3D-2-WG**	
3.0	15...20xI_n	100	100	50	**KTU9-40H-3D-3-WG**	
4.0	15...20xI_n	100	100	50	**KTU9-40H-3D-4-WG**	
5.0	15...20xI_n	100	100	50	**KTU9-40H-3D-5-WG**	
6.0	15...20xI_n	100	100	50	**KTU9-40H-3D-6-WG**	
8.0	15...20xI_n	100	100	50	**KTU9-40H-3D-8-WG**	
10.0	15...20xI_n	100	100	50	**KTU9-40H-3D-10-WG**	
12.0	15...20xI_n	65	65	25	**KTU9-40H-3D-12-WG**	
15.0	15...20xI_n	65	65	25	**KTU9-40H-3D-15-WG**	
20.0	15...20xI_n	65	65	~	**KTU9-40H-3D-20-WG**	
25.0	15...20xI_n	65	65	~	**KTU9-40H-3D-25-WG**	
30.0	15...20xI_n	65	65	~	**KTU9-40H-3D-30-WG**	
35.0	14 x I_n	65	65	~	**KTU9-40H-3D-35-WG**	
40.0	12 x I_n	65	65	~	**KTU9-40H-3D-40-WG**	

Includes:

- Type 4/12 enclosure – watertight, dusttight
- KTU9 UL489 Molded Case Circuit Breaker
- Black Type 4/4X/12; IP66 handle (Cat.# KT9-HTN) ❷

Modifications (Factory Assembled) ❸

KT9 Auxiliaries & Trip Contacts - Front Mount 250V max.	Add Suffix to Cat. Number
1 NO Auxiliary	**-B**
1 NC Auxiliary	**-A**
1 NO + 1 NC Auxiliary	**-C**
2 NO Auxiliaries	**-D**
1 NO SC+OL + 1 NC Auxiliary	**-R**
1 NO SC+OL + 1 NO Auxiliary	**-S**

❶ KTU9 up to 15 Amp is 100% rated in this enclosure. KTU9 20...30 Amp is 80% rated.
❷ A red and yellow handle may be selected instead of the standard black handle. Change "WG" suffix to "WJ". Ex: Change KTU9-40H-2D-0.16-**WG** to KTU9-40H-2D-0.16-**WJ**.
❸ Load Terminal Cover KT9-PEFC is included with any factory modifications.

Combination KWIKstarters

Type E/F Combination Motor Controllers

KTA9 can be applied in combination with a CA7 contactor for remote control and an enclosure with matching environmentally approved thru-the-door handle disconnect mechanism to meet all requirements for a Construction Type E or F Combination Starter. This selection of individual Combination starters are smaller and are less expensive than Classic Construction Type A (Fusible), or Type C (Thermal-magnetic Molded Case Circuit Breaker), as offered in the following pages.

Sprecher + Schuh has developed a KWIKStarter version of the Combination Motor Controller which can be easily field assembled or can be purchased as a factory assembly.

Why Type E/F?

NEC430-53.C.1 defines that the short-circuit protection of a single motor branch circuit shall be provided by a set of fuses or a thermal-magnetic molded case circuit breaker. Alternatively NEC 430-53.C.6 also permits the use of a Self-protected Combination Motor Controller can be used to not only provide short-circuit protection for a single motor branch circuit but also provide a means of disconnect and overload protection. Self-protected Combination motor controllers like KTA9 can be combined with CA7, providing a coil for cover control or remote operation. This results in a Construction Type E or Type F (based on selection depending on published UL ratings) Combination starter per UL508. For details of UL, NEC and CSA application standards and rules please see our online white paper, Applying KT9 Motor Controllers.

CL - KAL 709 024Z - CB10B - 3U -

KWIKstarter Type

	Non-reversing
CL	*KWIKstarter IEC 3-Phase*
	Reversing
CLU	*FVR KWIKstarter IEC*

Enclosure Type

KAL	*Type 4/4X/12 - IP66 Plastic*

Contactor Size

Standard **- Series CA7**

709
712
716
723
730
737
743
755

Contactor Coil

Standard **- Series CA7**

024Z	012E
0120	024E
220W	036E
0277	048E
0415	110E
0480	220E
0600	

Circuit Breaker

KTA9, Type E

A16B	*0.1-0.16A*
A25B	*0.16-0.25A*
A40B	*0.25-0.4A*
A63B	*0.4-0.63A*
B10B	*0.63-1A*
B16B	*1-1.6A*
C10B	*6.3-10A*
C16B	*10-16A*
B10B	*0.63-1A*
B25B	*1.6-2.5A*
B40B	*2.5-4A*
B40B	*2.5-4A*
B63B	*4-6.3A*

Cover Control

Non-Reversing

1Y	*Pilot Light Only*
3	*"Start-Stop" PB*
4	*"On-Off" PB*
5	*"Hand-Auto" S/S*
6	*"Off-On" S/S*
17	*"Hand-Off-Auto" Illum. S/S*
3U	*"Start-Stop" Multi-function PB*
4U	*"I-O" Multi-function PB*
9	*"Emergency Stop"*
0	*Reset Only*

Reversing

3U	*"For-Stop-Rev" Multi-function*
4U	*"Up-Stop-Down" Multi-function*
5U	*"Open-Stop-Close" Multi*
6	*"For-Off-Rev" S/S*
7	*"Up-Off-Close" S/S*
8	*"Open-Off-Close" S/S*
0	*Reset Only/Plug*

Options

For complete listing of Option Codes, refer to each Modification table in the section.

This illustration is for reference only. Turn to the appropriate page to determine specific catalog number.

Enclosed Non-Reversing Combination Controller, Type 1/12K/IP66 ❻❼

Amp / Horsepower Rating						Non-Metallic Type 1/12K/IP66 Enclosure (KS7-C0C4R) 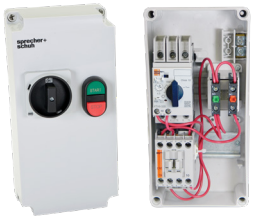	
Max. Horsepower ❶❷❸ Three Phase				O/L Relay Ampere Range	Magnetic Response Current	Catalog Number ❹❻❽❾	Dim Code
200V	230V	460V	575V				
KTA9-32S Standard Interrupting Capacity							
~	~	~	~	0.10...0.16	2.2	**CL-KAL709✱-CA16B-G▼**	Q4
~	~	~	~	0.16...0.25	3.5	**CL-KAL709✱-CA25B-G▼**	Q4
~	~	~	~	0.25...0.40	5.6	**CL-KAL709✱-CA40B-G▼**	Q4
~	~	~	~	0.40...0.63	8.8	**CL-KAL709✱-CA63B-G▼**	Q4
~	~	1/2	1/2	0.63...1.0	14	**CL-KAL709✱-CB10B-G▼**	Q4
~	~	3/4	~	1.0...1.6	22	**CL-KAL709✱-CB16B-G▼**	Q4
1/2	1/2	1	1-1/2	1.6...2.5	35	**CL-KAL709✱-CB25B-G▼**	Q4
3/4	3/4	2	3	2.5...4.0	52	**CL-KAL709✱-CB40B-G▼**	Q4
1	1-1/2	3	~	4.0...6.3	88	**CL-KAL709✱-CB63B-G▼**	Q4
2	2	5	~	6.3...10	140	**CL-KAL712✱-CC10B-G▼**	Q4
3	5	10	~	10...16	224	**CL-KAL716✱-CC16B-G▼**	Q4
KTA9-40H High Interrupting Capacity							
~	~	~	~	0.40...0.63	8.8	**CL-KAL709✱-DA63B-G▼**	Q4
~	~	1/2	1/2	0.63...1.0	14	**CL-KAL709✱-DB10B-G▼**	Q4
~	~	3/4	~	1.0...1.6	22	**CL-KAL709✱-DB16B-G▼**	Q4
1/2	1/2	1	1-1/2	1.6...2.5	33	**CL-KAL709✱-DB25B-G▼**	Q4
3/4	3/4	2	3	2.5...4.0	52	**CL-KAL709✱-DB40B-G▼**	Q4
1	1-1/2	3	5	4.0...6.3	82	**CL-KAL709✱-DB63B-G▼**	Q4
2	2	5	7-1/2	6.3...10	130	**CL-KAL712✱-DC10B-G▼**	Q4
3	5	10	10	10...16	208	**CL-KAL716✱-DC16B-G▼**	Q4

Includes:

- Type 1/12K Non-metallic enclosure (KS7-C0C4R)
- KTA9 "Type E/F" Self-protected Combination Motor Controller with 1 NO front mount Auxiliary Contact (Cat #: KT9-PE1-10)
- Terminal Adaptor for Type E Applications (Cat.# KT9-40-TE)
- CA7 contactor (for remote operation), AC coil
- Gray and black Type 1/12K; IP66 handle (KT9-SHB + KT9-KN) ❽
- Power wiring
- Factory installed Pilot device option ❻

Replace ▼ with option code.
See page F4:17 for factory installed modifications

Contactor AC Coil Codes (✱) ❹

AC Coil Code	Voltage Range 50 Hz	Voltage Range 60 Hz
120	**110V**	**120V**
220W	**200-220V**	**208-240V**
480 ❻	**440V**	**480V**

Electronic DC Coil Codes (✱) ❹

DC Coil Codes	Voltage
24E	**24V**

KWIKstarter coils are wired standard from the factory to terminals "L1" and "L2" (for line voltage control). This means the coil voltage must match the line voltage. When a coil is specified for 120V or less, it will be wired for a separate control source (not wired to L1 and L2).

❶ **Horsepower ratings shown in the table above are for reference. *The final selection of the controller depends on the actual motor full load current and service factor.*** For motor with service factor less than 1.15. Use motor nameplate full load current times 0.9 and choose the motor starter with the appropriate current range. Example: Motor FLC = 4.2A; S.F. = 1.0. 4.2A x 0.9 = 3.78A. Select catalog number KTA9-32S-4.0A.

❷ Magnetic trip is fixed at 14x the maximum value of the current adjustment range.

❸ CL-KAL may be applied to single phase loads. Contact factory for these specifications.

❹ Other voltages available, see Section A in this catalog. CL-KAL with electronic DC coils are not interchangeable with non-electronic DC or AC coils.

❺ KAIC Assembly Rating Index. See pages F3:17-F3:20 for Application Rating Guide.

❻ One Pilot Device option must be selected. Plastic Bezel is standard. Pilot Device options include D7-BX_ Base Mounted contact blocks. Pilot Light option must match coil voltage 24V AC or DC, 120V AC or 240V AC only. See Section H for more information.

❼ CPT not possible with KS7-C0C4R. Refer to page F4:32 for wiring diagram and F4:33 for dimensional information.

❽ A red and yellow handle may be selected instead of the standard gray and black handle. Change suffix "G" to "J". Ex: Change CL-KAL709✱-DB25B-**G**▼ to CL-KAL709✱-DB25B-**J**▼.

❾ Catalog number includes front-mounted auxiliary KT9-PE1-10 with 250 VAC maximum control circuit matching line voltage, or provided from separate source, used to de-energize contactor coil under fault condition (auxiliary not available for customer use). For control circuits greater than 300 VAC, which is common with line voltage, the auxiliary will not be wired into the control circuit since the contactor coil will be de-energized when KTA9 is tripped due to overload or short circuit; therefore, the KT9-PE1-10 auxiliary is available for customer use.

Enclosed Non-Reversing Combination Controller with Red ON/Run Light, Type 1/12K/IP66 ❻❼

Amp / Horsepower Rating						Non-Metallic Type 1/12K/IP66 Enclosure (KS7-C0C4R)	
Max. Horsepower ❶❷❸ Three Phase				O/L Relay Ampere Range	Magnetic Response Current	Catalog Number ❹❻❽❾	Dim Code
200V	230V	460V	575V				
KTA9-32S Standard Interrupting Capacity							
~	~	~	~	0.10...0.16	2.2	**CL-KAL709✱-CA16B-G1R4**	Q4
~	~	~	~	0.16...0.25	3.5	**CL-KAL709✱-CA25B-G1R4**	Q4
~	~	~	~	0.25...0.40	5.6	**CL-KAL709✱-CA40B-G1R4**	Q4
~	~	~	~	0.40...0.63	8.8	**CL-KAL709✱-CA63B-G1R4**	Q4
~	~	1/2	1/2	0.63...1.0	14	**CL-KAL709✱-CB10B-G1R4**	Q4
~	~	3/4	~	1.0...1.6	22	**CL-KAL709✱-CB16B-G1R4**	Q4
1/2	1/2	1	1-1/2	1.6...2.5	35	**CL-KAL709✱-CB25B-G1R4**	Q4
3/4	3/4	2	3	2.5...4.0	52	**CL-KAL709✱-CB40B-G1R4**	Q4
1	1-1/2	3	~	4.0...6.3	88	**CL-KAL709✱-CB63B-G1R4**	Q4
2	2	5	~	6.3...10	140	**CL-KAL712✱-CC10B-G1R4**	Q4
3	5	10	~	10...16	224	**CL-KAL716✱-CC16B-G1R4**	Q4
KTA9-40H High Interrupting Capacity							
~	~	~	~	0.40...0.63	8.8	**CL-KAL709✱-DA63B-G1R4**	Q4
~	~	1/2	1/2	0.63...1.0	14	**CL-KAL709✱-DB10B-G1R4**	Q4
~	~	3/4	~	1.0...1.6	22	**CL-KAL709✱-DB16B-G1R4**	Q4
1/2	1/2	1	1-1/2	1.6...2.5	33	**CL-KAL709✱-DB25B-G1R4**	Q4
3/4	3/4	2	3	2.5...4.0	52	**CL-KAL709✱-DB40B-G1R4**	Q4
1	1-1/2	3	5	4.0...6.3	82	**CL-KAL709✱-DB63B-G1R4**	Q4
2	2	5	7-1/2	6.3...10	130	**CL-KAL712✱-DC10B-G1R4**	Q4
3	5	10	10	10...16	208	**CL-KAL716✱-DC16B-G1R4**	Q4

Includes:

- Type 1/12K Non-metallic enclosure (KS7-C0C4R)
- KTA9 "Type E/F" Self-protected Combination Motor Controller with 1 NO front mount Auxiliary Contact (Cat #: KT9-PE1-10)
- Terminal Adaptor for Type E Applications (Cat.# KT9-40-TE)
- CA7 contactor (for remote operation)
- Gray and black Type 1/12K; IP66 handle (KT9-SHB + KT9-KN) ❽
- Power wiring
- Factory installed Red ON/Run Pilot light ❻

See page F4:17 for factory installed modifications

Contactor AC Coil Codes (✱) ❹

AC Coil Code	Voltage Range 50 Hz	Voltage Range 60 Hz
24Z	24V	24V
120	**110V**	**120V**
220W	**200-220V**	**208-240V**

Electronic DC Coil Codes (✱) ❹

DC Coil Codes	Voltage
24E	**24V**

KWIKstarter coils are wired standard from the factory to terminals "L1" and "L2" (for line voltage control). This means the coil voltage must match the line voltage. When a coil is specified for 120V or less, it will be wired for a separate control source (not wired to L1 and L2).

❶ **Horsepower ratings shown in the table above are for reference.** ***The final selection of the controller depends on the actual motor full load current and service factor.*** For motor with service factor less than 1.15. Use motor nameplate full load current times 0.9 and choose the motor starter with the appropriate current range. Example: Motor FLC = 4.2A; S.F. = 1.0. 4.2A x 0.9 = 3.78A. Select catalog number KTA9-32S-4.0A.

❷ Magnetic trip is fixed at 14x the maximum value of the current adjustment range.

❸ CL-KAL may be applied to single phase loads. Contact factory for these specifications.

❹ Select coil code from this page only, CL-KAL with electronic DC coils are not interchangeable with non-electronic DC or AC coils.

❺ KAIC Assembly Rating Index. See pages F3:17-F3:20 for Application Rating Guide.

❻ Plastic Bezel is standard. Pilot device options include D7-BX_ Base Mounted contact blocks. Pilot Light option must match coil voltage 24V AC or DC, 120V AC or 240V AC only. See Section H for more information.

❼ CPT not possible with KS7-C0C4R. Refer to page F4:32 for wiring diagram and F4:33 for dimensional information.

❽ A red and yellow handle may be selected instead of the standard gray and black handle. Change suffix "G" to "J". Ex: Change CL-KAL709✱-DB25B-**G1R4** to CL-KAL709✱-DB25B-**J1R4**.

❾ Catalog number includes front-mounted auxiliary KT9-PE1-10 with 250 VAC maximum control circuit matching line voltage, or provided from separate source, used to de-energize contactor coil under fault condition (auxiliary not available for customer use). For control circuits greater than 300 VAC, which is common with line voltage, the auxiliary will not be wired into the control circuit since the contactor coil will be de-energized when KTA9 is tripped due to overload or short circuit; therefore, the KT9-PE1-10 auxiliary is available for customer use.

Enclosed Non-Reversing Combination Controller with E-Stop, AC Operation - Type 1/12K/IP66 ❶❼❽

Amp / Horsepower Rating						Non-Metallic Type 1/12K/IP66 Enclosure (KS7-C0C4R)	
Max. Horsepower ❷❸❹				O/L Relay Ampere Range	Magnetic Response Current	Catalog Number ❺❼❾❿	Dim Code
Three Phase							
200V	230V	460V	575V				
KTA9-32S Standard Interrupting Capacity							
~	~	~	~	0.10...0.16	2.2	**CL-KAL709✱-CA16B-G3U-9**	Q4
~	~	~	~	0.16...0.25	3.5	**CL-KAL709✱-CA25B-G3U-9**	Q4
~	~	~	~	0.25...0.40	5.6	**CL-KAL709✱-CA40B-G3U-9**	Q4
~	~	~	~	0.40...0.63	8.8	**CL-KAL709✱-CA63B-G3U-9**	Q4
~	~	1/2	1/2	0.63...1.0	14	**CL-KAL709✱-CB10B-G3U-9**	Q4
~	~	3/4	~	1.0...1.6	22	**CL-KAL709✱-CB16B-G3U-9**	Q4
1/2	1/2	1	1-1/2	1.6...2.5	35	**CL-KAL709✱-CB25B-G3U-9**	Q4
3/4	3/4	2	3	2.5...4.0	52	**CL-KAL709✱-CB40B-G3U-9**	Q4
1	1-1/2	3	~	4.0...6.3	88	**CL-KAL709✱-CB63B-G3U-9**	Q4
2	2	5	~	6.3...10	140	**CL-KAL712✱-CC10B-G3U-9**	Q4
3	5	10	~	10...16	224	**CL-KAL716✱-CC16B-G3U-9**	Q4
KTA9-40H High Interrupting Capacity							
~	~	~	~	0.40...0.63	8.8	**CL-KAL709✱-DA63B-G3U-9**	Q4
~	~	1/2	1/2	0.63...1.0	14	**CL-KAL709✱-DB10B-G3U-9**	Q4
~	~	3/4	~	1.0...1.6	22	**CL-KAL709✱-DB16B-G3U-9**	Q4
1/2	1/2	1	1-1/2	1.6...2.5	33	**CL-KAL709✱-DB25B-G3U-9**	Q4
3/4	3/4	2	3	2.5...4.0	52	**CL-KAL709✱-DB40B-G3U-9**	Q4
1	1-1/2	3	5	4.0...6.3	82	**CL-KAL709✱-DB63B-G3U-9**	Q4
2	2	5	7-1/2	6.3...10	130	**CL-KAL712✱-DC10B-G3U-9**	Q4
3	5	10	10	10...16	208	**CL-KAL716✱-DC16B-G3U-9**	Q4

Includes:

- Type 1/12K Non-metallic enclosure (KS7-C0C4R) ❶
- KTA9 "Type E/F" Self-protected Combination Motor Controller with 1 NO front mount Auxiliary Contact (Cat #: KT9-PE1-10)
- Terminal Adaptor for Type E Applications (Cat.# KT9-40-TE)
- CA7 contactor (for remote operation), AC coil
- Multifunction 2-position Push Button and Emergency Stop ❼
- Gray and black Type 1/12K; IP66 handle (KT9-SHB + KT9-KN) ❾
- Power wiring

This is a factory assembly.
Optional factory modifications are not available on this device.

Contactor AC Coil Codes (✱) ❺

AC Coil Code	Voltage Range 50 Hz	Voltage Range 60 Hz
24Z	24V	24V
120	**110V**	**120V**
220W	**200-220V**	**208-240V**
415	400-415V	~
480 ❻	**440V**	**480V**
600 ❻	550V	600V

KWIKstarter coils are wired standard from the factory to terminals "L1" and "L2" (for line voltage control). This means the coil voltage must match the line voltage. When a coil is specified for 120V or less, it will be wired for a separate control source (not wired to L1 and L2).

❶ This is a factory assembly. The KS7-C0C4R does not include knock-outs for field assembly of this starter.
❷ **Horsepower ratings shown in the table above are for reference.** ***The final selection of the controller depends on the actual motor full load current and service factor.*** For motor with service factor less than 1.15. Use motor nameplate full load current times 0.9 and choose the motor starter with the appropriate current range. Example: Motor FLC = 4.2A; S.F. = 1.0. 4.2A x 0.9 = 3.78A. Select catalog number KTA9-32S-4.0A.
❸ Magnetic trip is fixed at 14x the maximum value of the current adjustment range.
❹ CL-KAL may be applied to single phase loads. Contact factory for these specifications.
❺ Other voltages available, see Section A in this catalog.
❻ KAIC Assembly Rating Index. See pages F3:17-F3:20 for Application Rating Guide.
❼ Uses D7P-U2EFFEPX11 Two-Position Multifunction push button with legend I/O and D7P-MT44PX01 Emergency Stop Push Button.
❽ CPT not possible with KS7-C0C4R. Refer page F4:33 for dimensional information.
❾ A red and yellow handle may be selected instead of the standard gray and black handle. Change suffix "G" to "J". Ex: CX7-9-10-✱-AS0.16A-A10-**G**4U-9 becomes CX7-9-10-✱-AS0.16A-A10-**PJ**4U-9.
❿ Catalog number (–A10) includes front-mounted auxiliary KT9-PE1-10 with 250 VAC maximum control circuit matching line voltage, or provided from separate source, used to de-energize contactor coil under fault condition (auxiliary not available for customer use). For control circuits greater than 300 VAC, which is common with line voltage, the auxiliary will not be wired into the control circuit since the contactor coil will be de-energized when KTA9 is tripped due to overload or short circuit; therefore, the KT9-PE1-10 auxiliary is available for customer use.

Enclosed Reversing Combination Controller, Type 1/12K/IP66 ❻❼

Amp / Horsepower Rating						Non-Metallic Type 1/12K/IP66 Enclosure (KS7-C0C4R)	
Max. Horsepower ❶❷❸ Three Phase				O/L Relay Ampere Range	Magnetic Response Current	Catalog Number ❹❻❽❾	Dim Code
200V	230V	460V	575V				
KTA9-32S Standard Interrupting Capacity							
~	~	~	~	0.10...0.16	2.2	**CL-KAL709✱-CA16B-G▼**	Q4
~	~	~	~	0.16...0.25	3.5	**CL-KAL709✱-CA25B-G▼**	Q4
~	~	~	~	0.25...0.40	5.6	**CL-KAL709✱-CA40B-G▼**	Q4
~	~	~	~	0.40...0.63	8.8	**CL-KAL709✱-CA63B-G▼**	Q4
~	~	1/2	1/2	0.63...1.0	14	**CL-KAL709✱-CB10B-G▼**	Q4
~	~	3/4	~	1.0...1.6	22	**CL-KAL709✱-CB16B-G▼**	Q4
1/2	1/2	1	1-1/2	1.6...2.5	35	**CL-KAL709✱-CB25B-G▼**	Q4
3/4	3/4	2	3	2.5...4.0	52	**CL-KAL709✱-CB40B-G▼**	Q4
1	1-1/2	3	~	4.0...6.3	88	**CL-KAL709✱-CB63B-G▼**	Q4
2	2	5	~	6.3...10	140	**CL-KAL712✱-CC10B-G▼**	Q4
3	5	10	~	10...16	224	**CL-KAL716✱-CC16B-G▼**	Q4
KTA9-40H High Interrupting Capacity							
~	~	~	~	0.40...0.63	8.8	**CL-KAL709✱-DA63B-G▼**	Q4
~	~	1/2	1/2	0.63...1.0	14	**CL-KAL709✱-DB10B-G▼**	Q4
~	~	3/4	~	1.0...1.6	22	**CL-KAL709✱-DB16B-G▼**	Q4
1/2	1/2	1	1-1/2	1.6...2.5	33	**CL-KAL709✱-DB25B-G▼**	Q4
3/4	3/4	2	3	2.5...4.0	52	**CL-KAL709✱-DB40B-G▼**	Q4
1	1-1/2	3	5	4.0...6.3	82	**CL-KAL709✱-DB63B-G▼**	Q4
2	2	5	7-1/2	6.3...10	130	**CL-KAL712✱-DC10B-G▼**	Q4
3	5	10	10	10...16	208	**CL-KAL716✱-DC16B-G▼**	Q4

Includes:

- Type 1/12K Non-metallic enclosure (KS7-C0C4R)
- KTA9 "Type E/F" Self-protected Combination Motor Controller with 1 NO front mount Auxiliary Contact (Cat #: KT9-PE1-10)
- Terminal Adaptor for Type E Applications (Cat.# KT9-40-TE)
- CAU7 reversing contactor (for remote operation)
- Gray and black Type 1/12K; IP66 handle (KT9-SHB + KT9-KN) ❽
- Power wiring
- Factory installed Pilot device option ❻

Replace ▼ with option code.
See page F4:17 for factory installed modifications

Contactor AC Coil Codes (✱) ❹

AC Coil Code	Voltage Range 50 Hz	Voltage Range 60 Hz
024Z	24V	24V
0120	**110V**	**120V**
220W	**200-220V**	**208-240V**
0415	400-415V	~
0480 ❻	**440V**	**480V**
0600 ❻	550V	600V

Electronic DC Coil Codes (✱) ❹

DC Coil Codes	Voltage
24E	**24V**

KWIKstarter coils are wired standard from the factory to terminals "L1" and "L2" (for line voltage control). This means the coil voltage must match the line voltage. When a coil is specified for 120V or less, it will be wired for a separate control source (not wired to L1 and L2).

❶ **Horsepower ratings shown in the table above are for reference.** ***The final selection of the controller depends on the actual motor full load current and service factor.*** For motor with service factor less than 1.15. Use motor nameplate full load current times 0.9 and choose the motor starter with the appropriate current range. Example: Motor FLC = 4.2A; S.F. = 1.0. 4.2A x 0.9 = 3.78A. Select catalog number KTA9-32S-4.0A.

❷ Magnetic trip is fixed at 14x the maximum value of the current adjustment range.

❸ CL-KAL may be applied to single phase loads. Contact factory for specifications.

❹ Other voltages available, see Section A in this catalog. CL-KAL with electronic coils are not interchangeable with non-electronic DC or AC coils.

❺ KAIC Assembly Rating Index. See pages F3:17-F3:20 for Application Rating Guide.

❻ One Pilot Device option must be selected. Plastic Bezel is standard. Pilot Device options include D7-BX_ Base Mounted contact blocks. Pilot Light option must match coil voltage 24V AC or DC, 120V AC or 240V AC only. See Section H for more information.

❼ CPT not possible with KS7-C0C4R. Refer to page F4:32 for wiring diagram and F4:33 for dimensional information.

❽ A red and yellow handle may be selected instead of the standard gray and black handle. Change suffix "G" to "J". Ex: Change CL-KAL709✱-CB16B-**G**▼ to CL-KAL709✱-CB16B-**J**▼.

❾ Catalog number includes front-mounted auxiliary KT9-PE1-10 with 250 VAC maximum control circuit matching line voltage, or provided from separate source, used to de-energize contactor coil under fault condition (auxiliary not available for customer use). For control circuits greater than 300 VAC, which is common with line voltage, the auxiliary will not be wired into the control circuit since the contactor coil will be de-energized when KTA9 is tripped due to overload or short circuit; therefore, the KT9-PE1-10 auxiliary is available for customer use.

CL-KAL Non-Reversing Controller Modifications

Pilot Device Options - required	
Select one option only ❶❷❸	**Replace ▼ in catalog number with**
START-STOP Multi-function	**3U**
I-O Multi-function	**4U**
OFF-ON 2-Position Selector switch	**6**
HAND-OFF-AUTO 3-Position Selector switch	
Illuminated (Red)	**17**
Non-Illuminated (Black)	**7**
Run Pilot Light Green	**1G3**
Run Pilot Light Red	**1R4**
D7-N8 22mm Hole Plug	**0**
Additional KT9 Auxiliaries & Trip Contacts	
Front Mount 250V maximum	
1 NO + 1 NC Auxiliary	**-C**
2 NO Auxiliaries	**-D**
1 NO SC+OL + 1 NC Auxiliary	**-T10A01**
1 NO SC+OL + 1 NO Auxiliary	**-T10A10**

CX7 Non-Reversing Controller Additions

Addition	Add to end of catalog number
CA7 Contactor Accessories	
Electronic Interface ❹	**-JE**
Surge Suppressor RC	**-RC**
Surge Suppressor Varistor	**-V**
CA7 Auxiliary Contacts ❺❻	
1 NO Auxiliary	**-S10**
1 NC Auxiliary	**-S01**
1 NO + 1 NC Auxiliary	**-S11**
2 NO Auxiliaries	**-S20**
2 NC Auxiliaries	**-S02**
Alternate Aux. Contact Arrangement (CA7 only)	
1 NC in lieu of standard 1 NO	**-SX10**
2 NC in lieu of standard 2 NO (on CXU7 only)	**-SX2**
Unwired Terminal Blocks Specify quantity (▼)	**-▼TB**

CLU-KAL Reversing Controller Modifications

Pilot Device Options - required	
Select one option only ❶❷❸	**Replace ▼ in catalog number with**
FOR-STOP-REV Multi-function	**3U**
UP-STOP-DOWN Multi-function	**4U**
OPEN-STOP-CLOSE Multi-function	**5U**
FOR-STOP-REV 3-Position Selector switch	**6**
UP-OFF-DOWN 3-Position Selector switch	**7**
OPEN-OFF-CLOSE 3-Position Selector switch	**8**
Overload Alarm Pilot Light (Red)	**1R4**
D7-N8 22mm Hole Plug	**0**
Additional KT7 Auxiliaries & Trip Contacts	
Front Mount 250V maximum	
1 NO + 1 NC Auxiliary	**-C**
2 NO Auxiliaries	**-D**
1 NO SC+OL + 1 NC Auxiliary	**-T10A01**
1 NO SC+OL + 1 NO Auxiliary	**-T10A10**

CXU7 Reversing Controller Additions

Addition	Add to end of catalog number
CA7 Contactor Accessories	
Electronic Interface ❹	**-JE**
Surge Suppressor RC	**-RC**
Surge Suppressor Varistor	**-V**

❶ KS7-C0C4R only has (1) 22mm hole to accomodate (1) pilot device.
❷ Currently supply D7 multi-function pushbuttons as standard which do not require protective boots to meet Type 4X.
See Section H in this catalog for description (all suffix's ending in "U").
❸ Pilot Lights may be applied with 24VAC/VDC, 120VAC or 240VAC Control Circuit. Pilot Lights with 380 VAC...575VAC require a control circuit transformer.
❹ CRI7E-24 will be used. CRI7E-12 by special order only.
❺ See Section A limitations on adding auxiliaries to Electronic DC Coil contactors.
❻ Additional auxiliaries are per contactor. Number of auxiliaries is double for reversing applications. Multiply price adder by two (2).

CL-KAL KWIKstarter Enclosures for use with KTA9 Type E Motor Controllers and CA7 Contactors ❶❸

Component	Description	For Use With		Environmental Approvals	Catalog Number
		Type E Controller	Contactor		
	Enclosure for Combo KWIKstarter ❶ CL-KAL709...716 CLU-KAL709...716	KTA9-32S KTA9-40H	CA7-9...16 CA7-9E...16E CAU7-9...16 CAU7-9E...16E	cUL Type 1/12K IEC IP66	**KS7-C0C4R**

Handle Accessory for CX7/CXU7 KWIKstarters ❶

Accessory	Description	For Use With	Color	Catalog Number
	Door Coupling Handle ❶ • Padlockable • NEMA Type 1/12K and IP66 • Includes handle coupling (shaft) • Requires KT9-KN1 Locking Knob	All KT9s	Gray/Black	**T.B.A.**
			Red/Yellow	**T.B.A.**
	Lockable Twist Knob • for use with KT9-SHB	All KT9s	Gray/Black	**KT9-KN**
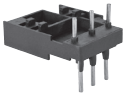	**Universal Connector for CL-KAL/CLU-KAL** • Provides electrical interconnection of KTA9 and CA7 (with AC or Electronic DC coil) • Applies to FVNR and FVR versions • Allows for mounting the CA7 on a single DIN rail	All KT9s	Black	**T.B.A. ❹**

CL-KAL KWIKstarter Pilot Device Kits (for use with KS7-C0C4R Type 1/12K) ❶❷❻

Kits	Description	Contact Blocks included		Catalog Number
		NO	NC	
	Multi-Function Pushbutton kit Non-illuminated **START-STOP** **I-O**	1	1	**KS7-P3U** **KS7-P4U**
	FOR-STOP-REV **UP-STOP-DOWN** **OPEN-STOP-CLOSE**	2	1	**KS7-P3U-REV** **KS7-P4U-REV** **KS7-P5U-REV**
	Selector switch kits Non-illuminated, includes legend plate **ON-OFF** 2-Position	1	0	**KS7-P6**
	HAND-OFF-AUTO 3-Position	2	0	**KS7-P7**
	FOR-OFF-REV 3-Position **UP-OFF-DOWN** 3-Position **OPEN-OFF-CLOSE** 3-Position	2	0	**KS7-P6-REV** **KS7-P7-REV** **KS7-P8-REV**
	Run Pilot Light or **Overload Alarm Pilot Light** Plastic operator with diffuser lens in Red, Green or Yellow, with integrated LED power module	Replace ✪ with color choice **R** = Red **G** = Green **Y** = Yellow		**KS7-P1✪24V ❺** **KS7-P1✪120V** **KS7-P1✪240V**
	Hole Plug used to plug 22.5mm holes.	Gray Plastic		**D7-N8**

❶ KS7-C0C4R is supplied with the following holes:
- (1) one 22mm hole for a Pilot Device option, select one kit from this page.
- (1) one 22mm hole for KT9-SHB (or SHRY) Disconnect or Reset handle.

❷ Plastic bezel is standard. Pilot Device Kits include D7-BX_ Base Mounted contact blocks. See Section H for more information.

❸ CPT not possible.

❹ Standard KT9-32S-PEC23 does not work in CL-KAL/CLU-KAL Kwikstarters.

❺ KS7-P1✪24V can be used with 24VAC or 24VDC.

❻ KS7-C0C4R series B enclosures compatible to KTA9 series controllers
KS7-C0C4R series A enclosures compatible to KTA9 series controllers

Enclosed Non-Reversing Combination Controller, AC Operation - Type 4 / 12

Painted Steel, Type 4 / 12 Enclosure

Amp / Horsepower Rating							
Max. Horsepower ❶❷ Three Phase				O/L Relay Ampere Range	Magnetic Response Current	Catalog Number ❸❻	Dimension Code
200V	230V	460V	575V				
KTA9-32S Standard Interrupting Capacity							
~	~	~	~	0.10...0.16	2.2	CX7-9-10-✱-AS0.16A-A10-WG	W6
~	~	~	~	0.16...0.25	3.5	CX7-9-10-✱-AS0.25A-A10-WG	W6
~	~	~	~	0.25...0.40	5.6	CX7-9-10-✱-AS0.40A-A10-WG	W6
~	~	~	~	0.40...0.63	8.8	CX7-9-10-✱-AS0.63A-A10-WG	W6
~	~	1/2	1/2	0.63...1.0	14	CX7-9-10-✱-AS1.0A-A10-WG	W6
~	~	3/4	~	1.0...1.6	22	CX7-9-10-✱-AS1.6A-A10-WG	W6
1/2	1/2	1	1-1/2	1.6...2.5	35	CX7-9-10-✱-AS2.5A-A10-WG	W6
3/4	3/4	2	3	2.5...4.0	52	CX7-9-10-✱-AS4.0A-A10-WG	W6
1	1-1/2	3	~	4.0...6.3	88	CX7-9-10-✱-AS6.3A-A10-WG	W6
2	2	5	~	6.3...10	140	CX7-12-10-✱-AS10A-A10-WG	W6
3	5	10	~	10...16	224	CX7-16-10-✱-AS16A-A10-WG	W6
KTA9-40H High Interrupting Capacity							
~	~	~	~	0.40...0.63	8.8	CX7-9-10-✱-AH0.63A-A10-WG	W6
~	~	1/2	1/2	0.63...1.0	14	CX7-9-10-✱-AH1.0A-A10-WG	W6
~	~	3/4	~	1.0...1.6	22	CX7-9-10-✱-AH1.6A-A10-WG	W6
1/2	1/2	1	1-1/2	1.6...2.5	33	CX7-9-10-✱-AH2.5A-A10-WG	W6
3/4	3/4	2	3	2.5...4.0	52	CX7-9-10-✱-AH4.0A-A10-WG	W6
1	1-1/2	3	5	4.0...6.3	82	CX7-9-10-✱-AH6.3A-A10-WG	W6
2	2	5	7-1/2	6.3...10	130	CX7-12-10-✱-AH10A-A10-WG	W6
3	5	10	10	10...16	208	CX7-16-10-✱-AH16A-A10-WG	W6
5	5	10	~	14.5...20	260	CX7-23-10-✱-AH20A-A10-WG	W6
5	7-1/2	15	~	18...25	325	CX7-23-10-✱-AH25A-A10-WG	W6
7-1/2	10	20	~	24...29	406	CX7-30-10-✱-AH29A-A10-WG	W6
7-1/2	10	25	~	27...32	448	CX7-37-10-✱-AH32A-A10-WG	W6
10	10	25	~	30...36	432	CX7-37-10-✱-AH36A-A10-WG	W6
10	10	30	~	34...40	480	CX7-43-10-✱-AH40A-A10-WG	W6
KTA7-45H High Interrupting Capacity							
3	3	7-1/2	10	6.3...10	130	CX7-30-10-✱-AH10A-A10-WG	W7
5	5	10	15	10...16	208	CX7-30-10-✱-AH16A-A10-WG	W7
5	7-1/2	15	20	14.5...20	260	CX7-30-10-✱-AH20A-A10-WG	W7
7-1/2	10	20	20	18...25	325	CX7-30-10-✱-AH25A-A10-WG	W7
7-1/2	10	20	25	23...32	416	CX7-30-10-✱-AH32A-A10-WG	W7
10	10	25	~	32...45	585	CX7-37-10-✱-AH45A-A10-WG	W7
10	15	30	~	32...45	585	CX7-43-10-✱-AH45A-A10-WG	W7

Includes:

- Type 4 / 12 enclosure - watertight, dustight
- KTA9 "Type E/F" Self-protected Combination Motor Controller with 1 NO front mount Auxiliary Contact (Cat #: KT9-PE1-10)
- Terminal Adaptor for Type E Applications (Cat.# KT9-40-TE or KT7-45-TE)
- CA7 contactor (for remote operation), AC coil
- Power wiring
- Gray and black Type 4/4X/12; IP66 handle (Cat.# KT9-HTN) ❸
- Pilot device shown is factory installed option

See page F4:23 for factory installed modifications

Contactor AC Coil Codes (✱) ❹

AC Coil Code	Voltage Range 50 Hz	Voltage Range 60 Hz
24Z	24V	24V
120	110V	120V
220W	200-220V	208-240V
415	400-415V	~
480 ❻	440V	480V
600 ❻	550V	600V

❶ **Horsepower ratings shown in the table above are for reference. The final selection of the controller depends on the actual motor full load current and service factor.**

- For motor with service factor less than 1.15. Use motor nameplate full load current times 0.9 and choose the motor starter with the appropriate current range. Example: Motor FLC = 4.2A; S.F. = 1.0. 4.2A x 0.9 = 3.78A. Select catalog number KTA9-32S-4.0A.

❷ CX7 may be applied to single phase loads. See footnote 1 for device selection criteria. To order single phase unit, change "CX7" in catalog number to "CBX7". Three pole series connection will be provided. Ex: Change **CX7**-9-10-✱-0.16A-A10-WG to **CBX7**-9-10-✱-0.16A-A10-WJ.

❸ A red and yellow handle may be selected instead of the standard gray and black handle. Change "WG" suffix to "WJ". Ex: Change CX7-9-10-✱-0.16A-A10-**WG** to CX7-9-10-✱-0.16A-A10-**WJ**.

❹ Other voltages available, see Section A in this catalog.

❺ KAIC Assembly Rating Index. See pages F3:17-F3:20 for Application Rating Guide.

❻ Catalog number (–A10) includes front-mounted auxiliary KT9-PE1-10 with 250 VAC maximum control circuit matching line voltage, or provided from separate source, used to de-energize contactor coil under fault condition (auxiliary not available for customer use). For control circuits greater than 300 VAC, which is common with line voltage, the auxiliary will not be wired into the control circuit since the contactor coil will be de-energized when KTA9 is tripped due to overload or short circuit; therefore, the KT9-PE1-10 auxiliary is available for customer use.

Enclosed Non-Reversing Combination Controller, Electronic DC Coil - Type 4 / 12

Painted Steel, Type 4 / 12 Enclosure

Amp / Horsepower Rating							
Max. Horsepower ❶❷ Three Phase				O/L Relay Ampere Range	Magnetic Response Current	Catalog Number ❸	Dimension Code
200V	230V	460V	575V				
KTA9-32S Standard Interrupting Capacity							
~	~	~	~	0.10...0.16	2.2	**CX7-9E-10-✱-AS0.16A-A10-WG**	W6
~	~	~	~	0.16...0.25	3.5	**CX7-9E-10-✱-AS0.25A-A10-WG**	W6
~	~	~	~	0.25...0.40	5.6	**CX7-9E-10-✱-AS0.40A-A10-WG**	W6
~	~	~	~	0.40...0.63	8.8	**CX7-9E-10-✱-AS0.63A-A10-WG**	W6
~	~	1/2	1/2	0.63...1.0	14	**CX7-9E-10-✱-AS1.0A-A10-WG**	W6
~	~	3/4	~	1.0...1.6	22	**CX7-9E-10-✱-AS1.6A-A10-WG**	W6
1/2	1/2	1	1-1/2	1.6...2.5	35	**CX7-9E-10-✱-AS2.5A-A10-WG**	W6
3/4	3/4	2	3	2.5...4.0	52	**CX7-9E-10-✱-AS4.0A-A10-WG**	W6
1	1-1/2	3	~	4.0...6.3	88	**CX7-9E-10-✱-AS6.3A-A10-WG**	W6
2	2	5	~	6.3...10	140	**CX7-12E-10-✱-AS10A-A10-WG**	W6
3	5	10	~	10...16	224	**CX7-16E-10-✱-AS16A-A10-WG**	W6
KTA9-40H High Interrupting Capacity							
~	~	~	~	0.40...0.63	8.8	**CX7-9E-10-✱-AH0.63A-A10-WG**	W6
~	~	1/2	1/2	0.63...1.0	14	**CX7-9E-10-✱-AH1.0A-A10-WG**	W6
~	~	3/4	~	1.0...1.6	22	**CX7-9E-10-✱-AH1.6A-A10-WG**	W6
1/2	1/2	1	1-1/2	1.6...2.5	33	**CX7-9E-10-✱-AH2.5A-A10-WG**	W6
3/4	3/4	2	3	2.5...4.0	52	**CX7-9E-10-✱-AH4.0A-A10-WG**	W6
1	1-1/2	3	5	4.0...6.3	82	**CX7-9E-10-✱-AH6.3A-A10-WG**	W6
2	2	5	7-1/2	6.3...10	130	**CX7-12E-10-✱-AH10A-A10-WG**	W6
3	5	10	10	10...16	208	**CX7-16E-10-✱-AH16A-A10-WG**	W6
5	5	10	~	14.5...20	260	**CX7-23E-10-✱-AH20A-A10-WG**	W6
5	7-1/2	15	~	18...25	325	**CX7-23E-10-✱-AH25A-A10-WG**	W6
7-1/2	10	20	~	24...29	406	**CX7-30E-10-✱-AH29A-A10-WG**	W6
7-1/2	10	25	~	27...32	448	**CX7-37E-10-✱-AH32A-A10-WG**	W6
10	10	25	~	30...36	432	**CX7-37E-10-✱-AH36A-A10-WG**	W6
10	10	30	~	34...40	480	**CX7-43E-10-✱-AH40A-A10-WG**	W6
KTA7-45H High Interrupting Capacity							
3	3	7-1/2	10	6.3...10	130	**CX7-30E-10-✱-AH10A-A10-WG**	W7
5	5	10	15	10...16	208	**CX7-30E-10-✱-AH16A-A10-WG**	W7
5	7-1/2	15	20	14.5...20	260	**CX7-30E-10-✱-AH20A-A10-WG**	W7
7-1/2	10	20	20	18...25	325	**CX7-30E-10-✱-AH25A-A10-WG**	W7
7-1/2	10	20	25	23...32	416	**CX7-37E-10-✱-AH32A-A10-WG**	W7
10	10	25	~	32...45	585	**CX7-37E-10-✱-AH45A-A10-WG**	W7
10	15	30	~	32...45	585	**CX7-43E-10-✱-AH45A-A10-WG**	W7

Includes:

- Type 4 / 12 enclosure - watertight, dustight
- KT9 "Type E/F" Combination Motor Controller with 1 NO front mount Auxiliary Contact (Cat #: KT9-PE1-10)
- Terminal Adaptor for Type E Applications (Cat.# KT9-40-TE or KT7-45-TE)
- CA7 contactor (for remote operation), Electronic DC coil
- Power wiring
- Gray and black Type 4/4X/12; IP66 handle (Cat.# KT9-HTN) ❸
- Pilot device shown is factory installed option

See page F4:23 for factory installed modifications

Contactor Electronic DC Coil Codes (✱) ❹

DC Coil Codes	Voltage
12E	12V
24E	**24V**
36E	36-48V
48E	48-72V
110E	110-125V
220E	220-250V

Ordering Instructions

Specify Catalog Number	
Replace (✱) with Coil Code Select modifications if required	**See Coil Code tables on this page for codes**

❶ **Horsepower ratings shown in the table above are for reference.** ***The final selection of the controller depends on the actual motor full load current and service factor.***

- For motor with service factor less than 1.15. Use motor nameplate full load current times 0.9 and choose the motor starter with the appropriate current range. Example: Motor FLC = 4.2A; S.F. = 1.0. 4.2A x 0.9 = 3.78A. Select catalog number KTA9-32S-4.0A.

❷ CX7 may be applied to single phase loads. Contact factory for these specifications.

❸ A red and yellow handle may be selected instead of the standard gray and black handle. Change "WG" suffix to "WJ". Ex: Change CX7-9E-10-✱-0.16A-A10-**WG** to CX7-9E-10-✱-0.16A-A10-**WJ**.

❹ CX7-9E...43E with electronic coils are not interchangeable with non-electronic DC or AC coils.

❺ KAIC Assembly Rating Index. See pages F3:17-F3:20 for Application Rating Guide.

Enclosed Reversing Combination Controller, AC Operation - Type 4 / 12

Painted Steel, Type 4 / 12 Enclosure

Amp / Horsepower Rating							
Max. Horsepower ❶❷ Three Phase				O/L Relay Ampere Range	Magnetic Response Current	Catalog Number ❸❻	Dimension Code
200V	230V	460V	575V				
KTA9-32S Standard Interrupting Capacity							
~	~	~	~	0.10...0.16	2.2	**CXU7-9-22-✱-AS0.16A-A10-WG**	W6
~	~	~	~	0.16...0.25	3.5	**CXU7-9-22-✱-AS0.25A-A10-WG**	W6
~	~	~	~	0.25...0.40	5.6	**CXU7-9-22-✱-AS0.40A-A10-WG**	W6
~	~	~	~	0.40...0.63	8.8	**CXU7-9-22-✱-AS0.63A-A10-WG**	W6
~	~	1/2	1/2	0.63...1.0	14	**CXU7-9-22-✱-AS1.0A-A10-WG**	W6
~	~	3/4	~	1.0...1.6	22	**CXU7-9-22-✱-AS1.6A-A10-WG**	W6
1/2	1/2	1	1-1/2	1.6...2.5	35	**CXU7-9-22-✱-AS2.5A-A10-WG**	W6
3/4	3/4	2	3	2.5...4.0	52	**CXU7-9-22-✱-AS4.0A-A10-WG**	W6
1	1-1/2	3	~	4.0...6.3	88	**CXU7-9-22-✱-AS6.3A-A10-WG**	W6
2	2	5	~	6.3...10	140	**CXU7-12-22-✱-AS10A-A10-WG**	W6
3	5	10	~	10...16	224	**CXU7-16-22-✱-AS16A-A10-WG**	W6
KTA9-40H High Interrupting Capacity							
~	~	~	~	0.40...0.63	8.8	**CXU7-9-22-✱-AH0.63A-A10-WG**	W6
~	~	1/2	1/2	0.63...1.0	14	**CXU7-9-22-✱-AH1.0A-A10-WG**	W6
~	~	3/4	~	1.0...1.6	22	**CXU7-9-22-✱-AH1.6A-A10-WG**	W6
1/2	1/2	1	1-1/2	1.6...2.5	33	**CXU7-9-22-✱-AH2.5A-A10-WG**	W6
3/4	3/4	2	3	2.5...4.0	52	**CXU7-9-22-✱-AH4.0A-A10-WG**	W6
1	1-1/2	3	5	4.0...6.3	82	**CXU7-9-22-✱-AH6.3A-A10-WG**	W6
2	2	5	7-1/2	6.3...10	130	**CXU7-12-22-✱-AH10A-A10-WG**	W6
3	5	10	10	10...16	208	**CXU7-16-22-✱-AH16A-A10-WG**	W6
5	5	10	~	14.5...20	260	**CXU7-23-22-✱-AH20A-A10-WG**	W6
5	7-1/2	15	~	18...25	325	**CXU7-23-22-✱-AH25A-A10-WG**	W6
7-1/2	10	20	~	24...29	406	**CXU7-30-22-✱-AH29A-A10-WG**	W6
7-1/2	10	25	~	27...32	448	**CXU7-37-22-✱-AH32A-A10-WG**	W6
10	10	25	~	30...36	432	**CXU7-37-22-✱-AH36A-A10-WG**	W6
10	10	30	~	34...40	480	**CXU7-43-22-✱-AH40A-A10-WG**	W6
KTA9-45H High Interrupting Capacity							
3	3	7-1/2	10	6.3...10	130	**CXU7-30-22-✱-AH10A-A10-WG**	W7
5	5	10	15	10...16	208	**CXU7-30-22-✱-AH16A-A10-WG**	W7
5	7-1/2	15	20	14.5...20	260	**CXU7-30-22-✱-AH20A-A10-WG**	W7
7-1/2	10	20	20	18...25	325	**CXU7-30-22-✱-AH25A-A10-WG**	W7
7-1/2	10	20	25	23...32	416	**CXU7-37-22-✱-AH32A-A10-WG**	W7
10	10	25	~	32...45	585	**CXU7-37-22-✱-AH45A-A10-WG**	W7
10	15	30	~	32...45	585	**CXU7-43-22-✱-AH45A-A10-WG**	W7

❶ **Horsepower ratings shown in the table above are for reference.** ***The final selection of the controller depends on the actual motor full load current and service factor.***

- For motor with service factor less than 1.15. Use motor nameplate full load current times 0.9 and choose the motor starter with the appropriate current range. Example: Motor FLC = 4.2A; S.F. = 1.0. 4.2A x 0.9 = 3.78A. Select catalog number KTA9-32S-4.0A.

❷ CXU7 may be applied to single phase loads. Contact factory for these applications.

❸ A red and yellow handle may be selected instead of the standard gray and black handle. Change "WG" suffix to "WJ". Ex: Change CXU7-9-10-✱-0.16A-A10-**WG** to CXU7-9-10-✱-0.16A-A10-**WJ**.

❹ Other voltages available, see Section A in this catalog.

❺ KAIC Assembly Rating Index. See pages F3:17-F3:20 for Application Rating Guide.

❻ Catalog number (–A10) includes front-mounted auxiliary KT9-PE1-10 with 250 VAC maximum control circuit matching line voltage, or provided from separate source, used to de-energize contactor coil under fault condition (auxiliary not available for customer use). For control circuits greater than 300 VAC, which is common with line voltage, the auxiliary will not be wired into the control circuit since the contactor coil will be de-energized when KTA9 is tripped due to overload or short circuit; therefore, the KT9-PE1-10 auxiliary is available for customer use.

Includes:

- Type 4 / 12 enclosure - watertight, dustight
- KT9 "Type E/F" Combination Motor Controller with 1 NO front mount Auxiliary Contact (Cat #: KT9-PE1-10)
- Terminal Adaptor for Type E Applications (Cat.# KT9-40-TE or KT7-45-TE)
- CA7 contactors (for remote operation), AC coil
- Power wiring
- Gray and black Type 4/4X/12; IP66 handle (Cat.# KT9-HTN) ❸
- Control power transformer, pilot device, terminals and other equipment shown are factory installed options

See page F4:23 for factory installed modifications

Contactor AC Coil Codes (✱) ❺

AC Coil Code	Voltage Range 50 Hz	Voltage Range 60 Hz
24Z	24V	24V
120	**110V**	**120V**
220W	**200-220V**	**208-240V**
415	400-415V	~
480 ❻	**440V**	**480V**
600 ❻	550V	600V

Enclosed Reversing Combination Controller, Electronic DC Coil - Type 4 / 12

Painted Steel, Type 4 / 12 Enclosure

Amp / Horsepower Rating							
Max. Horsepower ❶❷ Three Phase				O/L Relay Ampere Range	Magnetic Response Current	Catalog Number ❸	Dimension Code
200V	230V	460V	575V				
KTA9-32S Standard Interrupting Capacity							
~	~	~	~	0.10...0.16	2.2	**CXU7-9E-22-✱-AS0.16A-A10-WG**	W6
~	~	~	~	0.16...0.25	3.5	**CXU7-9E-22-✱-AS0.25A-A10-WG**	W6
~	~	~	~	0.25...0.40	5.6	**CXU7-9E-22-✱-AS0.40A-A10-WG**	W6
~	~	~	~	0.40...0.63	8.8	**CXU7-9E-22-✱-AS0.63A-A10-WG**	W6
~	~	1/2	1/2	0.63...1.0	14	**CXU7-9E-22-✱-AS1.0A-A10-WG**	W6
~	~	3/4	~	1.0...1.6	22	**CXU7-9E-22-✱-AS1.6A-A10-WG**	W6
1/2	1/2	1	1-1/2	1.6...2.5	35	**CXU7-9E-22-✱-AS2.5A-A10-WG**	W6
3/4	3/4	2	3	2.5...4.0	52	**CXU7-9E-22-✱-AS4.0A-A10-WG**	W6
1	1-1/2	3	~	4.0...6.3	88	**CXU7-9E-22-✱-AS6.3A-A10-WG**	W6
2	2	5	~	6.3...10	140	**CXU7-12E-22-✱-AS10A-A10-WG**	W6
3	5	10	~	10...16	224	**CXU7-16E-22-✱-AS16A-A10-WG**	W6
KTA9-40H High Interrupting Capacity							
~	~	~	~	0.40...0.63	8.8	**CXU7-9E-22-✱-AH0.63A-A10-WG**	W6
~	~	1/2	1/2	0.63...1.0	14	**CXU7-9E-22-✱-AH1.0A-A10-WG**	W6
~	~	3/4	~	1.0...1.6	22	**CXU7-9E-22-✱-AH1.6A-A10-WG**	W6
1/2	1/2	1	1-1/2	1.6...2.5	33	**CXU7-9E-22-✱-AH2.5A-A10-WG**	W6
3/4	3/4	2	3	2.5...4.0	52	**CXU7-9E-22-✱-AH4.0A-A10-WG**	W6
1	1-1/2	3	5	4.0...6.3	82	**CXU7-9E-22-✱-AH6.3A-A10-WG**	W6
2	2	5	7-1/2	6.3...10	130	**CXU7-12E-22-✱-AH10A-A10-WG**	W6
3	5	10	10	10...16	208	**CXU7-16E-22-✱-AH16A-A10-WG**	W6
5	5	10	~	14.5...20	260	**CXU7-23E-22-✱-AH20A-A10-WG**	W6
5	7-1/2	15	~	18...25	325	**CXU7-23E-22-✱-AH25A-A10-WG**	W6
7-1/2	10	20	~	24...29	406	**CXU7-30E-22-✱-AH29A-A10-WG**	W6
7-1/2	10	25	~	27...32	448	**CXU7-37E-22-✱-AH32A-A10-WG**	W6
10	10	25	~	30...36	432	**CXU7-37E-22-✱-AH36A-A10-WG**	W6
10	10	30	~	34...40	480	**CXU7-43E-22-✱-AH40A-A10-WG**	W6
KTA7-45H High Interrupting Capacity							
3	3	7-1/2	10	6.3...10	130	**CXU7-30E-22-✱-AH10A-A10-WG**	W7
5	5	10	15	10...16	208	**CXU7-30E-22-✱-AH16A-A10-WG**	W7
5	7-1/2	15	20	14.5...20	260	**CXU7-30E-22-✱-AH20A-A10-WG**	W7
7-1/2	10	20	20	18...25	325	**CXU7-30E-22-✱-AH25A-A10-WG**	W7
7-1/2	10	20	25	23...32	416	**CXU7-37E-22-✱-AH32A-A10-WG**	W7
10	10	25	~	32...45	585	**CXU7-37E-22-✱-AH45A-A10-WG**	W7
10	15	30	~	32...45	585	**CXU7-43E-22-✱-AH45A-A10-WG**	W7

Includes:

- Type 4 / 12 enclosure - watertight, dustight
- KTA9 "Type E/F" Combination Motor Controller with 1 NO front mount Auxiliary Contact (Cat #: KT9-PE1-10)
- Terminal Adaptor for Type E Applications (Cat.# KT9-40-TE or KT7-45-TE)
- CA7 contactors (for remote operation), Electronic DC coil
- Power wiring
- Gray and black Type 4/4X/12; IP66 handle (Cat.# KT9-HTN) ❸
- Control power transformer, pilot device, terminals and other equipment shown are factory installed options

See page F4:23 for factory installed modifications

Contactor Electronic DC Coil Codes (✱) ❹

DC Coil Codes	Voltage
12E	12V
24E	**24V**
36E	36-48V
48E	48-72V
110E	110-125V
220E	220-250V

Ordering Instructions

Specify Catalog Number	
Replace (✱) with Coil Code Select modifications if required	**See Coil Code tables on this page for codes**

❶ **Horsepower ratings shown in the table above are for reference.**
The final selection of the controller depends on the actual motor full load current and service factor.

- For motor with service factor less than 1.15. Use motor nameplate full load current times 0.9 and choose the motor starter with the appropriate current range. Example: Motor FLC = 4.2A; S.F. = 1.0. 4.2A x 0.9 = 3.78A. Select catalog number KTA9-32S-4.0A.

❷ CXU7 may be applied to single phase loads. Contact factory for these applications.

❸ A red and yellow handle may be selected instead of the standard gray and black handle. Change "WG" suffix to "WJ". Ex: Change CXU7-9E-10-✱-0.16A-A10-**WG** to CXU7-9E-10-✱-0.16A-A10-**WJ**.

❹ CXU7-9E...43E with electronic coils are not interchangeable with non-electronic DC or AC coils.

❺ KAIC Assembly Rating Index. See pages F3:17-F3:20 for Application Rating Guide.

Non-Reversing and Reversing CX7 Combination Controller Modifications (Factory Assembled)

Description	Add Suffix to Catalog Number
Pilot Devices ❶	
START-STOP multi-function pushbutton	**3U**
ON-OFF multi-function pushbutton	**4U**
FOR-STOP-REV multi-function pushbutton	**3U**
UP-STOP-DOWN multi-function pushbutton	**4U**
OPEN-STOP-CLOSE multi-function pushbutton	**5U**
HAND-AUTO selector switch	**5**
OFF-ON selector switch	**6**
HAND-OFF-AUTO selector switch	**7**
FOR-OFF-REV selector switch	**6**
UP-OFF-DOWN selector switch	**7**
OPEN-OFF-CLOSE selector switch	**8**
Pilot light only ❸	**1**
Pilot lights only (2) ❸	**2**
Pilot light w/ START-STOP multi-function pushbutton ❸	**13U**
Pilot light w/ ON-OFF multi-function pushbutton ❸	**14U**
Pilot light w/ HAND-AUTO selector switch ❸	**15**
Pilot light w/ OFF-ON selector switch ❸	**16**
Pilot light w/ HAND-OFF-AUTO selector switch ❸	**17**
Control Power Transformer	
(with fused primary and secondary)	Replace (✱) in catalog # with the following codes ❷
Primary volts / *Secondary volts*	
50 watt Standard Capacity: 208 / 120	**XA**
240 / 120	**XB**
480 / 120	**XC**
575 / 120	**XD**
380 / 110	**XG**
240 / 24	**XE**
480 / 24	**XF**
600 / 24	**XJ**
KT9 Auxiliaries & Trip Contacts	
Front mount 250V maximum	
1 NO + 1 NC Auxiliary	**-C**
2 NO Auxiliaries	**-D**
1 NO SC+OL + 1 NC Auxiliary	**-R**
1 NO SC+OL + 1 NO Auxiliary	**-S**
Side Mount 600V maximum	
2 NC Auxiliaries	**-AS02**
2 NO Auxiliaries	**-AS20**
1 NO + 1 NC Auxiliary	**-AS11**

Description	Add Suffix to Catalog Number
Undervoltage & Shunt Modules	
KT9 Accessories	
Undervoltage Release Module (Select coil voltage from table below)	**-UA✱**
Shunt Release Module	**-AA✱**
CA7 Auxiliary Contacts ❺	
1 NO Auxiliary	**-S10**
1 NC Auxiliary	**-S01**
1 NO + 1 NC Auxiliary	**-S11**
2 NO Auxiliaries	**-S20**
2 NC Auxiliaries	**-S02**
1 NO + 2 NC Auxiliary	**-F12**
2 NO + 1 NC Auxiliary	**-F21**
3 NO Auxiliaries	**-F30**
3 NC Auxiliaries	**-F03**
1 NO + 3 NC Auxiliary	**-F13**
3 NO + 1 NC Auxiliary	**-F31**
2 NO + 2 NC Auxiliary	**-F22**
4 NO Auxiliaries	**-F40**
4 NC Auxiliaries	**-F04**
Alternate Aux. Contact Arrangement (CA7 only)	
1 NC in lieu of standard 1 NO	**-SX10**
2 NC in lieu of standard 2 NO (on CXU7 only)	**-SX2**
CA7 Contactor Accessories	
Electronic Interface	**-JE ❹**
Surge Suppressor RC	**-RC**
Surge Suppressor Varistor	**-V**
Unwired Terminal Blocks Specify quantity (▼)	**-▼TB**

-UA..-AA Coil Codes (✱)

AC Coil Code	Voltage Range 50 Hz	Voltage Range 60 Hz
24	24V	24V...28V
120	**110V**	**120V**
230	220...230V	~
260	~	240...260V
277	~	277V
400	380...400V	~
480	415V	480V

❶ Currently supply D7 multi-function pushbuttons as standard which do not require protective boots to meet Type 4X. See Section H in this catalog for description (all suffix's ending in "U").

❷ Factory modifications often change the enclosure size. Refer to factory for dimensions when critical to the installation.

❸ Pilot Lights may be applied with 24VAC/VDC, 120VAC or 240VAC Control Circuit. Pilot Lights with 277 VAC...575VAC require a control circuit transformer.

❹ CRI7E-24 will be used. CRI7E-12 by special order only.

❺ Additional auxiliaries are per contactor. Number of auxiliaries is double for reversing applications. Multiply price adder by two (2).

CX7 Explosion Proof Combination Controllers - NEMA Type 4/4X/7/9 with Type 4 Gaskets

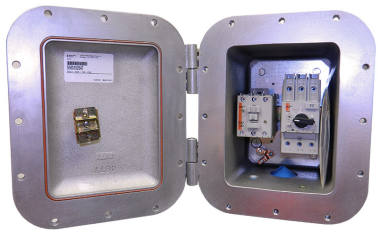

Amp / Horsepower Rating							
Max. Horsepower ❶❷❸ Three Phase				O/L Relay Ampere Range	Magnetic Response Current	Catalog Number ❺	Dimension Code
200V	230V	460V	575V				
KTA9-32S Standard Interrupting Capacity							
~	~	~	~	0.10...0.16	2.2	**CX7-9-10-✱-AS0.16A-A10-EZ**	EZ
~	~	~	~	0.16...0.25	3.5	**CX7-9-10-✱-AS0.25A-A10-EZ**	EZ
~	~	~	~	0.25...0.40	5.6	**CX7-9-10-✱-AS0.40A-A10-EZ**	EZ
~	~	~	~	0.40...0.63	8.8	**CX7-9-10-✱-AS0.63A-A10-EZ**	EZ
~	~	1/2	1/2	0.63...1.0	14	**CX7-9-10-✱-AS1.0A-A10-EZ**	EZ
~	~	3/4	~	1.0...1.6	22	**CX7-9-10-✱-AS1.6A-A10-EZ**	EZ
1/2	1/2	1	1-1/2	1.6...2.5	35	**CX7-9-10-✱-AS2.5A-A10-EZ**	EZ
3/4	3/4	2	3	2.5...4.0	52	**CX7-9-10-✱-AS4.0A-A10-EZ**	EZ
1	1-1/2	3	~	4.0...6.3	88	**CX7-9-10-✱-AS6.3A-A10-EZ**	EZ
2	2	5	~	6.3...10	140	**CX7-12-10-✱-AS10A-A10-EZ**	EZ
3	5	10	~	10...16	224	**CX7-16-10-✱-AS16A-A10-EZ**	EZ
KTA9-40H High Interrupting Capacity							
~	~	~	~	0.40...0.63	8.8	**CX7-9-10-✱-AH0.63A-A10-EZ**	EZ
~	~	1/2	1/2	0.63...1.0	14	**CX7-9-10-✱-AH1.0A-A10-EZ**	EZ
~	~	3/4	~	1.0...1.6	22	**CX7-9-10-✱-AH1.6A-A10-EZ**	EZ
1/2	1/2	1	1-1/2	1.6...2.5	33	**CX7-9-10-✱-AH2.5A-A10-EZ**	EZ
3/4	3/4	2	3	2.5...4.0	52	**CX7-9-10-✱-AH4.0A-A10-EZ**	EZ
1	1-1/2	3	5	4.0...6.3	82	**CX7-9-10-✱-AH6.3A-A10-EZ**	EZ
2	2	5	7-1/2	6.3...10	130	**CX7-12-10-✱-AH10A-A10-EZ**	EZ
3	5	10	10	10...16	208	**CX7-16-10-✱-AH16A-A10-EZ**	EZ
5	5	10	~	14.5...20	260	**CX7-23-10-✱-AH20A-A10-EZ**	EZ
5	7-1/2	15	~	18...25	325	**CX7-23-10-✱-AH25A-A10-EZ**	EZ
7-1/2	10	20	~	24...29	406	**CX7-23-10-✱-AH29A-A10-EZ**	EZ
7-1/2	10	25	~	27...32	448	**CX7-23-10-✱-AH32A-A10-EZ**	EZ
10	10	25	~	30...36	432	**CX7-23-10-✱-AH36A-A10-EZ**	EZ
10	10	30	~	34...40	480	**CX7-23-10-✱-AH40A-A10-EZ**	EZ
KTA7-45H High Interrupting Capacity							
3	3	7-1/2	10	6.3...10	130	**CX7-30-10-✱-AH10A-A10-EZ**	EZ
5	5	10	15	10...16	208	**CX7-30-10-✱-AH16A-A10-EZ**	EZ
5	7-1/2	15	20	14.5...20	260	**CX7-30-10-✱-AH20A-A10-EZ**	EZ
7-1/2	10	20	20	18...25	325	**CX7-30-10-✱-AH25A-A10-EZ**	EZ
7-1/2	10	20	25	23...32	416	**CX7-30-10-✱-AH32A-A10-EZ**	EZ
10	10	25	~	32...45	585	**CX7-37-10-✱-AH45A-A10-EZ**	EZ
10	15	30	~	32...45	585	**CX7-43-10-✱-AH45A-A10-EZ**	EZ

Includes:

- Class I, Div I, Group B, C & D – Class II, Div I, Group E, F & G enclosure Class III, Zone I, IIB & H2
- KT9 "Type E" Self-protected Combination Manual Motor Controller with 1 NO front mount auxiliary contact (Cat.# KT9-PE1-10)
- Terminal Adaptor for Combo Type E/F Applications (Cat.# KT9-40-TE or KT7-45-TE)
- CA7 contactor (for remote operation), AC coil
- Power wiring

Modifications (Factory Assembled)

KT9 Auxiliaries & Trip Contacts,	Add Suffix to Cat. Number
Front Mount 250V max.	
1 NC Auxiliary	**-A**
1 NO + 1 NC Auxiliary	**-C**
2 NO Auxiliaries	**-D**
1 NO SC+OL + 1 NC Auxiliary	**-R**
1 NO SC+OL + 1 NO Auxiliary	**-S**
Side Mount 600V max.	
2 NO Auxiliaries	**-AS20**
1 NO + 1 NC Auxiliary	**-AS11**
CA7 Contactor Accessories	**Add Suffix to Cat. Number**
1 NC Auxiliary	**-S01**
1 NO Auxiliary	**-S10**
Electronic Interface	**-JE**
Surge Suppressor RC	**-RC**
Surge Suppressor Varistor	**-V**
Enclosure Modifications	
Dual START/STOP pushbutton	**3**
ON/OFF selector switch	**6**
H-O-A	**7**
Breather/Drain	**-BD**

Contactor AC Coil Codes (✱) ❹

AC Coil Code	Voltage Range 50 Hz	Voltage Range 60 Hz
24Z	24V	24V
120	**110V**	**120V**
220W	**200-220V**	**208-240V**
415	400-415V	~
480 ❻	**440V**	**480V**
600 ❻	550V	600V

❶ **Horsepower ratings shown in the table above are for reference.** ***The final selection of the controller depends on the actual motor full load current and service factor.***

- For motor with service factor less than 1.15. Use motor nameplate full load current times 0.9 and choose the motor starter with the appropriate current range. Example: Motor FLC = 4.2A; S.F. = 1.0. 4.2A x 0.9 = 3.78A. Select catalog number KTA9-32S-4.0A.

❷ Magnetic trip is fixed at 14x the maximum value of the current adjustment range.

❸ CX7 may be applied to single phase loads. See footnote 1 for device selection criteria. To order single phase unit, change "CX7" in catalog number to "CBX7". Three pole series connection will be provided. Ex: Change **CX7**-9-10-✱-0.16A-A10-EZ to **CBX7**-9-10-✱-0.16A-A10-EZ.

❹ Other voltages available, see Section A in this catalog.

❺ Catalog number (–A10) includes front-mounted auxiliary KT9-PE1-10 with 300 VAC maximum control circuit matching line voltage, or provided from separate source, used to de-energize contactor coil under fault condition (auxiliary not available for customer use). For control circuits greater than 300 VAC, which is common with line voltage, the auxiliary will not be wired into the control circuit since the contactor coil will be de-energized when KTA9 is tripped due to overload or short circuit; therefore, the KT9-PE1-10 auxiliary is available for customer use.

Ordering Instructions

Specify Catalog Number	
Replace (✱) with Coil Code Select modifications if required	**See tables on this page for codes**

Type E/F Simplex & Duplex Pump Controllers

CXP7-9...

Simplex Pump Controllers

A single KTA9 motor controller plus matching CA7 contactor can be combined in an enclosure as a Simplex Combination Controller for pumping applications. Additional space is provided for the customer to field addition of time clocks or float switches as required by the application. An environmentally approved thru-the-door handle provides for a required disconnect. These pump panels can be supplied with Suitable for Service Entrance (SUSE) label on demand. Type E/F pump panels are less expensive than the classic Construction Type A (Fusible) or Construction Type C (MCCB) versions shown in Section C of this catalog.

Type E/F Simplex Pump Controller Panels include:

- Contactor (with AC coil)
- Type E Self-protected motor controller
- "START" Momentary Push Button
- "HOA" Selector Switch
- A minimum of 6" x 10" extra back pan space
- UL Type rated enclosure

Duplex Pump Controllers

Two starter duplex panels can be fed from one power source or two power sources and include lead/lag control circuitry to meet customers' need in pumping and many other applications. Two environmentally approved thru-the-door handle disconnect mechanisms means no main feeder device is required and smaller and less expensive panel than a classic duplex panel as offered in Section C of this catalog. The following pages include a selection of duplex controllers and you can contact your Sprecher + Schuh representative to modify the selection.

Type E/F Duplex Pump Controller Panels include:

- (2) Contactors (AC coil) and (2) Type E/F self protected motor controllers
- (1) Electronic alternating relay
- (1) UL type rated enclosure
- Designed per alternation control diagram shown at bottom of page F4:31

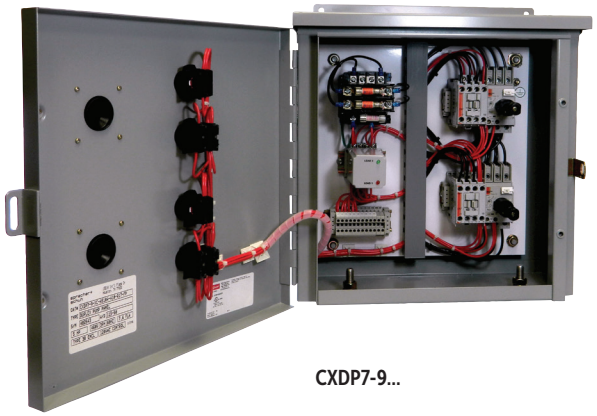

CXDP7-9...

Series CXP7 & Type E/F Combo Pump Panel

Max. Horsepower ❶❷❸ Three Phase				Current Adjustment Range (A)	Magnetic Response Current	Type 3R Rainproof (Metal) Catalog Number ❹❻	Dimension Code	Type 4X Watertight Corrosion Resistant Non-metallic Catalog Number ❹❻	Dimension Code
200V	230V	460V	575V						
KTA9-32S Standard Interrupting Capacity									
~	~	~	~	0.10...0.16	2.2	CXP7-9-10-✱-AS0.16A-A10-RG	O	CXP7-9-10-✱-AS0.16A-A10-CG	R/F
~	~	~	~	0.16...0.25	3.5	CXP7-9-10-✱-AS0.25A-A10-RG	O	CXP7-9-10-✱-AS0.25A-A10-CG	R/F
~	~	~	~	0.25...0.40	5.6	CXP7-9-10-✱-AS0.40A-A10-RG	O	CXP7-9-10-✱-AS0.40A-A10-CG	R/F
~	~	~	~	0.40...0.63	8.8	CXP7-9-10-✱-AS0.63A-A10-RG	O	CXP7-9-10-✱-AS0.63A-A10-CG	R/F
~	~	1/2	1/2	0.63...1.0	14	CXP7-9-10-✱-AS1.0A-A10-RG	O	CXP7-9-10-✱-AS1.0A-A10-CG	R/F
~	~	3/4	~	1.0...1.6	22	CXP7-9-10-✱-AS1.6A-A10-RG	O	CXP7-9-10-✱-AS1.6A-A10-CG	R/F
1/2	1/2	1	1-1/2	1.6...2.5	35	CXP7-9-10-✱-AS2.5A-A10-RG	O	CXP7-9-10-✱-AS2.5A-A10-CG	R/F
3/4	3/4	2	3	2.5...4.0	52	CXP7-9-10-✱-AS4.0A-A10-RG	O	CXP7-9-10-✱-AS4.0A-A10-CG	R/F
1	1-1/2	3	~	4.0...6.3	88	CXP7-9-10-✱-AS6.3A-A10-RG	O	CXP7-9-10-✱-AS6.3A-A10-CG	R/F
2	2	5	~	6.3...10	140	CXP7-12-10-✱-AS10A-A10-RG	O	CXP7-12-10-✱-AS10A-A10-CG	R/F
3	5	10	~	10...16	224	CXP7-16-10-✱-AS16A-A10-RG	O	CXP7-16-10-✱-AS16A-A10-CG	R/F
KTA9-40H High Interrupting Capacity									
~	~	~	~	0.40...0.63	8.8	CXP7-9-10-✱-AH0.63A-A10-RG	O	CXP7-9-10-✱-AH0.63A-A10-CG	R/F
~	~	1/2	1/2	0.63...1.0	14	CXP7-9-10-✱-AH1.0A-A10-RG	O	CXP7-9-10-✱-AH1.0A-A10-CG	R/F
~	~	3/4	~	1.0...1.6	22	CXP7-9-10-✱-AH1.6A-A10-RG	O	CXP7-9-10-✱-AH1.6A-A10-CG	R/F
1/2	1/2	1	1-1/2	1.6...2.5	33	CXP7-9-10-✱-AH2.5A-A10-RG	O	CXP7-9-10-✱-AH2.5A-A10-CG	R/F
3/4	3/4	2	3	2.5...4.0	52	CXP7-9-10-✱-AH4.0A-A10-RG	O	CXP7-9-10-✱-AH4.0A-A10-CG	R/F
1	1-1/2	3	5	4.0...6.3	82	CXP7-9-10-✱-AH6.3A-A10-RG	O	CXP7-9-10-✱-AH6.3A-A10-CG	R/F
2	2	5	7-1/2	6.3...10	130	CXP7-12-10-✱-AH10A-A10-RG	O	CXP7-12-10-✱-AH10A-A10-CG	R/F
3	5	10	10	10...16	208	CXP7-16-10-✱-AH16A-A10-RG	O	CXP7-16-10-✱-AH16A-A10-CG	R/F
5	5	10	~	14.5...20	260	CXP7-23-10-✱-AH20A-A10-RG	O	CXP7-23-10-✱-AH20A-A10-CG	R/F
5	7-1/2	15	~	18...25	325	CXP7-23-10-✱-AH25A-A10-RG	O	CXP7-23-10-✱-AH25A-A10-CG	R/F
7-1/2	10	20	~	24...29	406	CXP7-30-10-✱-AH29A-A10-RG	O	CXP7-30-10-✱-AH29A-A10-CG	R/F
7-1/2	10	25	~	27...32	448	CXP7-37-10-✱-AH32A-A10-RG	O	CXP7-37-10-✱-AH32A-A10-CG	R/F
10	10	25	~	30...36	432	CXP7-37-10-✱-AH36A-A10-RG	O	CXP7-37-10-✱-AH36A-A10-CG	R/F
10	10	30	~	34...40	480	CXP7-43-10-✱-AH40A-A10-RG	O	CXP7-43-10-✱-AH40A-A10-CG	R/F
KTA7-45H High Interrupting Capacity									
3	3	7-1/2	10	6.3...10	130	CXP7-30-10-✱-AH10A-A10-RG	Q	CXP7-30-10-✱-AH10A-A10-CG	R/F
5	5	10	15	10...16	208	CXP7-30-10-✱-AH16A-A10-RG	Q	CXP7-30-10-✱-AH16A-A10-CG	R/F
5	7-1/2	15	20	14.5...20	260	CXP7-30-10-✱-AH20A-A10-RG	Q	CXP7-30-10-✱-AH20A-A10-CG	R/F
7-1/2	10	20	20	18...25	325	CXP7-30-10-✱-AH25A-A10-RG	Q	CXP7-30-10-✱-AH25A-A10-CG	R/F
7-1/2	10	20	25	23...32	416	CXP7-30-10-✱-AH32A-A10-RG	Q	CXP7-30-10-✱-AH32A-A10-CG	R/F
10	10	25	~	32...45	585	CXP7-37-10-✱-AH45A-A10-RG	Q	CXP7-37-10-✱-AH45A-A10-CG	R/F
10	15	30	~	32...45	585	CXP7-43-10-✱-AH45A-A10-RG	Q	CXP7-43-10-✱-AH45A-A10-CG	R/F

NOTE: Catalog Numbers, list Prices and enclosure dimensions reflect contactors with AC coils. Contact factory for DC applications.

Contactor AC Coil Codes (✱) ❺

AC Coil Code	Voltage Range 50 Hz	Voltage Range 60 Hz
024Z	24V	24V
0120	110V	120V
220W	200-220V	208-240V
0415	400-415V	~
0480 ❻	440V	480V
0600 ❻	550V	600V

Ordering Instructions

Specify Catalog Number	
Replace (✱) with Coil Code Factory Modifications available	**See this page** **Contact factory**

❶ **Horsepower ratings shown in the table above are for reference.** ***The final selection of the controller depends on the actual motor full load current and service factor.***

- For motor with service factor less than 1.15. Use motor nameplate full load current times 0.9 and choose the motor starter with the appropriate current range. Example: Motor FLC = 4.2A; S.F. = 1.0. 4.2A x 0.9 = 3.78A. Select catalog number KTA9-32S-4.0A.

❷ Magnetic trip is fixed at 13x the maximum value of the current adjustment range.

❸ CXP7 may be applied to single phase loads. See footnote 1 for device selection criteria. To order single phase unit, change "CXP7" in catalog number to "CBX7". Three pole series connection will be provided. Ex: Change **CXP7**-9-10-✱-0.16A-A10-RG to **CBXP7**-9-10-✱-0.16A-A10-RG.

❹ A red and yellow handle may be selected instead of the standard gray and black handle. Change "RG" suffix to "RJ". Ex: Change CXP7-9-10-✱-0.16A-A10-**RG** to CXP7-9-10-✱-0.16A-A10-**RJ**.

❺ Other voltages available, see Section A in this catalog.

❻ Catalog number (–A10) includes front-mounted auxiliary KT9-PE1-10 with 300 VAC maximum control circuit matching line voltage, or provided from separate source, used to de-energize contactor coil under fault condition (auxiliary not available for customer use). For control circuits greater than 300 VAC, which is common with line voltage, the auxiliary will not be wired into the control circuit since the contactor coil will be de-energized when KTA9 is tripped due to overload or short circuit; therefore, the KT9-PE1-10 auxiliary is available for customer use.

Series CXDP7 with Type E/F Combination Controller

Max. Horsepower Three Phase				Current Adjustment Range (A)	Magnetic Response Current	Type 3R Rainproof (Metal) Catalog Number ❷	Dimension Code	Type 4X Watertight Corrosion Resistant Non-metallic Catalog Number ❷	Dimension Code
200V	230V	460V	575V						
KTA9-32S Standard Interrupting Capacity									
~	~	~	~	0.10...0.16	2.2	CXDP7-9-10-✱-AS0.16A-A10-RG	R/F	CXDP7-9-10-✱-AS0.16A-A10-CG	R/F
~	~	~	~	0.16...0.25	3.5	CXDP7-9-10-✱-AS0.25A-A10-RG	R/F	CXDP7-9-10-✱-AS0.25A-A10-CG	R/F
~	~	~	~	0.25...0.40	5.6	CXDP7-9-10-✱-AS0.40A-A10-RG	R/F	CXDP7-9-10-✱-AS0.40A-A10-CG	R/F
~	~	~	~	0.40...0.63	8.8	CXDP7-9-10-✱-AS0.63A-A10-RG	R/F	CXDP7-9-10-✱-AS0.63A-A10-CG	R/F
~	~	1/2	1/2	0.63...1.0	14	CXDP7-9-10-✱-AS1.0A-A10-RG	R/F	CXDP7-9-10-✱-AS1.0A-A10-CG	R/F
~	~	3/4	~	1.0...1.6	22	CXDP7-9-10-✱-AS1.6A-A10-RG	R/F	CXDP7-9-10-✱-AS1.6A-A10-CG	R/F
1/2	1/2	1	1-1/2	1.6...2.5	35	CXDP7-9-10-✱-AS2.5A-A10-RG	R/F	CXDP7-9-10-✱-AS2.5A-A10-CG	R/F
3/4	3/4	2	3	2.5...4.0	52	CXDP7-9-10-✱-AS4.0A-A10-RG	R/F	CXDP7-9-10-✱-AS4.0A-A10-CG	R/F
1	1-1/2	3	~	4.0...6.3	88	CXDP7-9-10-✱-AS6.3A-A10-RG	R/F	CXDP7-9-10-✱-AS6.3A-A10-CG	R/F
2	2	5	~	6.3...10	140	CXDP7-12-10-✱-AS10A-A10-RG	R/F	CXDP7-12-10-✱-AS10A-A10-CG	R/F
3	5	10	~	10...16	224	CXDP7-16-10-✱-AS16A-A10-RG	R/F	CXDP7-16-10-✱-AS16A-A10-CG	R/F
KTA9-40H High Interrupting Capacity									
~	~	~	~	0.40...0.63	8.8	CXDP7-9-10-✱-AH0.63A-A10-RG	R/F	CXDP7-9-10-✱-AH0.63A-A10-CG	R/F
~	~	1/2	1/2	0.63...1.0	14	CXDP7-9-10-✱-AH1.0A-A10-RG	R/F	CXDP7-9-10-✱-AH1.0A-A10-CG	R/F
~	~	3/4	~	1.0...1.6	22	CXDP7-9-10-✱-AH1.6A-A10-RG	R/F	CXDP7-9-10-✱-AH1.6A-A10-CG	R/F
1/2	1/2	1	1-1/2	1.6...2.5	33	CXDP7-9-10-✱-AH2.5A-A10-RG	R/F	CXDP7-9-10-✱-AH2.5A-A10-CG	R/F
3/4	3/4	2	3	2.5...4.0	52	CXDP7-9-10-✱-AH4.0A-A10-RG	R/F	CXDP7-9-10-✱-AH4.0A-A10-CG	R/F
1	1-1/2	3	5	4.0...6.3	82	CXDP7-9-10-✱-AH6.3A-A10-RG	R/F	CXDP7-9-10-✱-AH6.3A-A10-CG	R/F
2	2	5	7-1/2	6.3...10	130	CXDP7-12-10-✱-AH10A-A10-RG	R/F	CXDP7-12-10-✱-AH10A-A10-CG	R/F
3	5	10	10	10...16	208	CXDP7-16-10-✱-AH16A-A10-RG	R/F	CXDP7-16-10-✱-AH16A-A10-CG	R/F
5	5	10	~	14.5...20	260	CXDP7-23-10-✱-AH20A-A10-RG	R/F	CXDP7-23-10-✱-AH20A-A10-CG	R/F
5	7-1/2	15	~	18...25	325	CXDP7-23-10-✱-AH25A-A10-RG	R/F	CXDP7-23-10-✱-AH25A-A10-CG	R/F
7-1/2	10	20	~	24...29	406	CXDP7-30-10-✱-AH29A-A10-RG	R/F	CXDP7-30-10-✱-AH29A-A10-CG	R/F
7-1/2	10	25	~	27...32	448	CXDP7-37-10-✱-AH32A-A10-RG	R/F	CXDP7-37-10-✱-AH32A-A10-CG	R/F
10	10	25	~	30...36	432	CXDP7-37-10-✱-AH36A-A10-RG	R/F	CXDP7-37-10-✱-AH36A-A10-CG	R/F
10	10	30	~	34...40	480	CXDP7-43-10-✱-AH40A-A10-RG	R/F	CXDP7-43-10-✱-AH40A-A10-CG	R/F
KTA7-45H High Interrupting Capacity									
3	3	7-1/2	10	6.3...10	130	CXDP7-30-10-✱-AH10A-A10-RG	R/F	CXDP7-30-10-✱-AH10A-A10-CG	R/F
5	5	10	15	10...16	208	CXDP7-30-10-✱-AH16A-A10-RG	R/F	CXDP7-30-10-✱-AH16A-A10-CG	R/F
5	7-1/2	15	20	14.5...20	260	CXDP7-30-10-✱-AH20A-A10-RG	R/F	CXDP7-30-10-✱-AH20A-A10-CG	R/F
7-1/2	10	20	20	18...25	325	CXDP7-30-10-✱-AH25A-A10-RG	R/F	CXDP7-30-10-✱-AH25A-A10-CG	R/F
7-1/2	10	20	25	23...32	416	CXDP7-30-10-✱-AH32A-A10-RG	R/F	CXDP7-30-10-✱-AH32A-A10-CG	R/F
10	10	25	~	32...45	585	CXDP7-37-10-✱-AH45A-A10-RG	R/F	CXDP7-37-10-✱-AH45A-A10-CG	R/F
10	15	30	~	32...45	585	CXDP7-43-10-✱-AH45A-A10-RG	R/F	CXDP7-43-10-✱-AH45A-A10-CG	R/F

NOTE: Catalog Numbers, list Prices and enclosure dimensions reflect contactors with AC coils. Contact factory for DC applications.

R/F - Experience has shown that applications using non-metallic enclosures often require customized pump panels (i.e. Door-in-Door or unique control circuit). Contact your Sprecher + Schuh representative for a customized price.

Contactor AC Coil Codes (✱) ❶

AC Coil Code	Voltage Range 50 Hz	Voltage Range 60 Hz
024Z	24V	24V
0120	110V	120V
220W	200-220V	208-240V
0415	400-415V	~
0480 ❻	440V	480V
0600 ❻	550V	600V

❶ Other voltages available, see Section A in this catalog.

❷ Catalog number (–A10) includes front-mounted auxiliary KT9-PE1-10 with 300 VAC maximum control circuit matching line voltage, or provided from separate source, used to de-energize contactor coil under fault condition (auxiliary not available for customer use). For control circuits greater than 300 VAC, which is common with line voltage, the auxiliary will not be wired into the control circuit since the contactor coil will be de-energized when KTA9 is tripped due to overload or short circuit; therefore, the KT9-PE1-10 auxiliary is available for customer use.

Ordering Instructions

Specify Catalog Number	
Replace (✱) with Coil Code Factory Modifications available	**See this page** **Contact factory**

Custom Multi-Starter Control Panels

From 10 to 100 or more, consult the experts

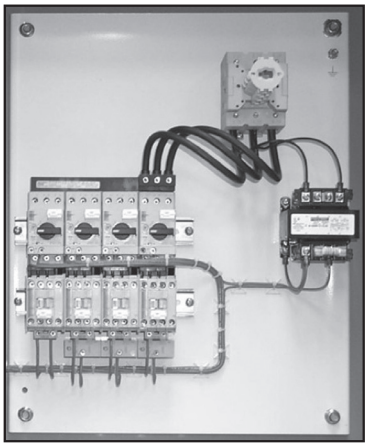

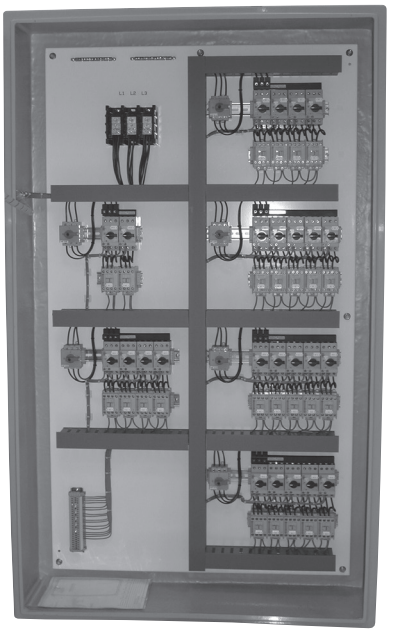

Your Motor Control + Protection Consultant

Sprecher + Schuh's slogan is "Motor control + protection consultant". This means part of our job is to be knowledgeable about these issues and to help customers choose components that not only comply with UL, NEC and CSA standards but also maximizes the SCCR rating of the assembled multi-starter panel, leading to increased protection of equipment and personnel.

Multiple KTA9, KTB9 or KTC9 motor controllers plus matching CA7 contactors can be combined in a single assembly as a multi-motor starter custom control panel. Three, 33, 133 or more motor controllers and KTU9 molded case circuit breakers, as well as other power components and control circuits, can be designed and assembled into a custom multi-motor starter by Sprecher + Schuh to meet customers' unique application requirements. These pages include a few pictures of custom multi-starter control panels built by Sprecher + Schuh. Contact your Sprecher + Schuh motor control and protection representative for consultation regarding design, quotations, or help explaining the complex UL, NEC and CSA codes that apply to a custom assembly.

For your **Custom application**

contact
customquotes@sprecherschuh.com

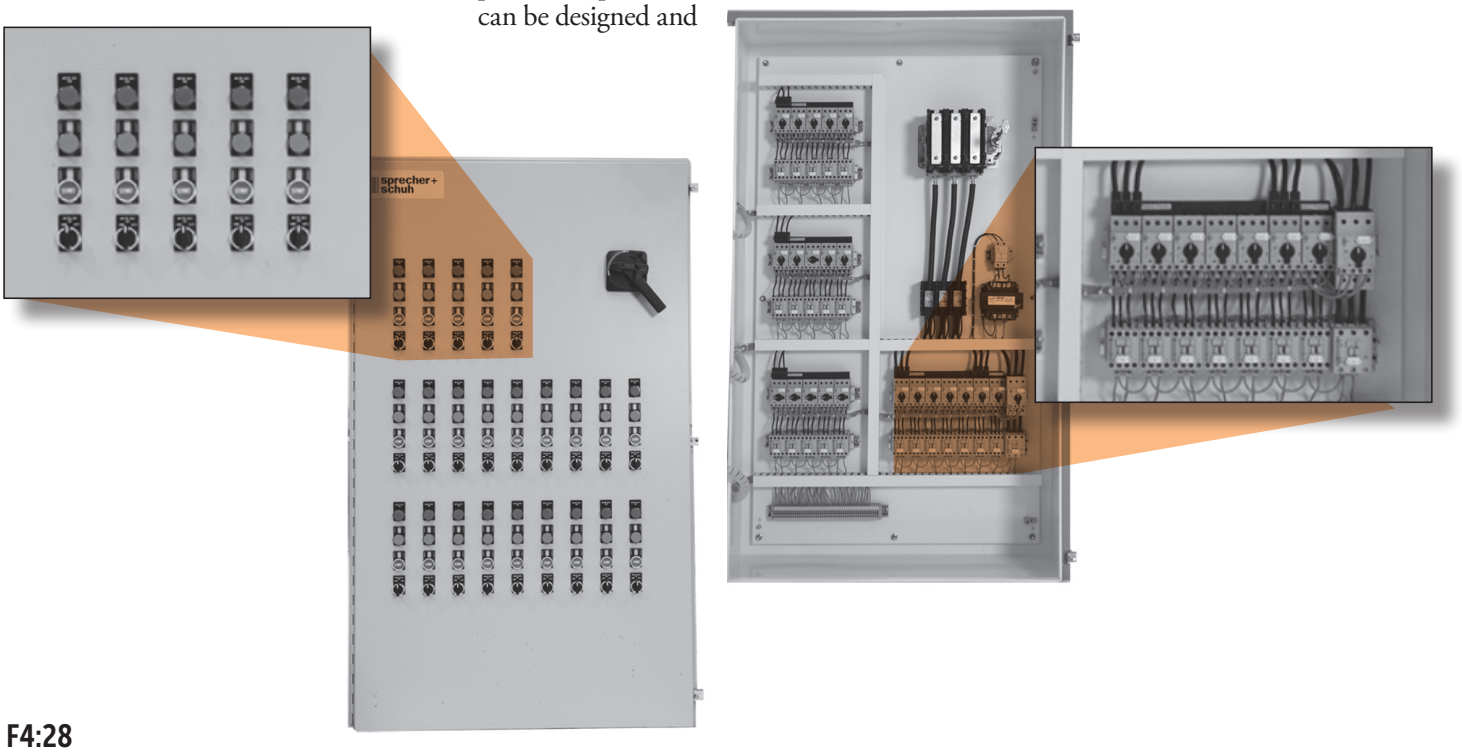

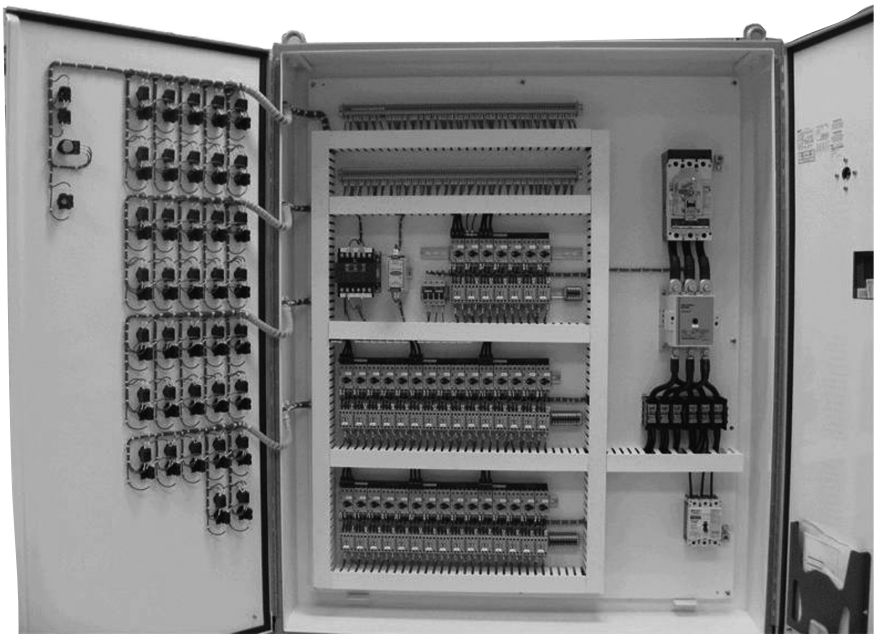

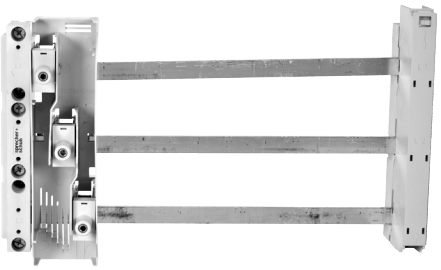

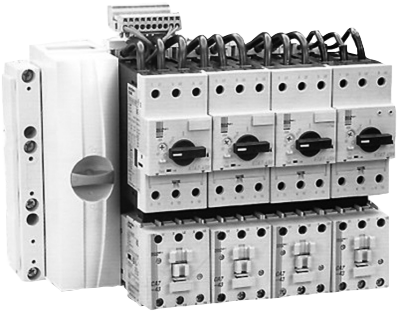

Short Circuit Current Ratings (SSCR)

Short Circuit Current Ratings as defined by UL is a hot topic of discussion within the controls marketplace.

UL 508A Industrial Control Panel specifications require every multiple motor starter panel assembly to be labeled with the Short-Circuit Current Rating (SCCR), which depends on the weakest component's KAIC rating. The SCCR rules are complicated and UL conducts classes around the country on this subject. Sprecher + Schuh conducted a survey of multi-starter panel builders which indicated an increased concern on the part of panel builders to comply with the UL regulations; yet many do not truly understand the complexity of the rules. This is another reason to consult the experts at Sprecher + Schuh.

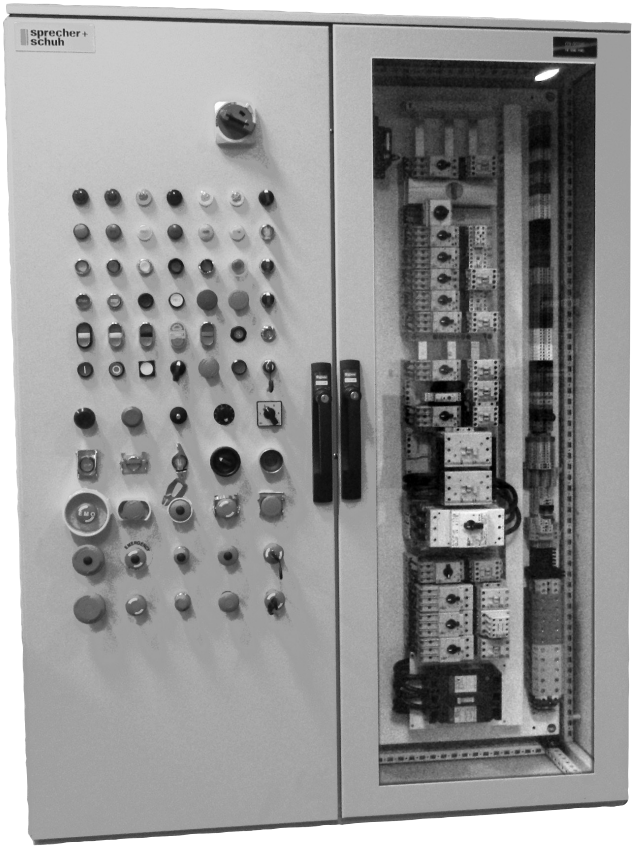

3-Phase 60mm Bus Bar System vertically arranged to maximize space

Custom Bus Bar Systems

Sprecher + Schuh has teamed-up with *Wöhner* to supply 3-phase 60 mm bus bar systems. Bus Bar systems offer more flexibility, and a smaller, more economical alternative to a Motor Control Center that uses 'bucket' design.

- Sprecher + Schuh can supply 3-phase 60 mm bus bar components for customer assembly into a control panel.
- We can help design a 3-phase 60 mm bus bar system and provide it with or without components and ship to the customer as open assembly.
- Sprecher + Schuh can help design a 3-phase 60 mm bus bar system and integrate that bus system into an enclosed assembly or multi-starter custom control panel to meet customers' unique specifications.

Please contact your local Sprecher + Schuh Representative or our Technical Support Team to help design our components to meet your needs, which can include building the custom control.

Single, Two and Three Phase Connection Diagram

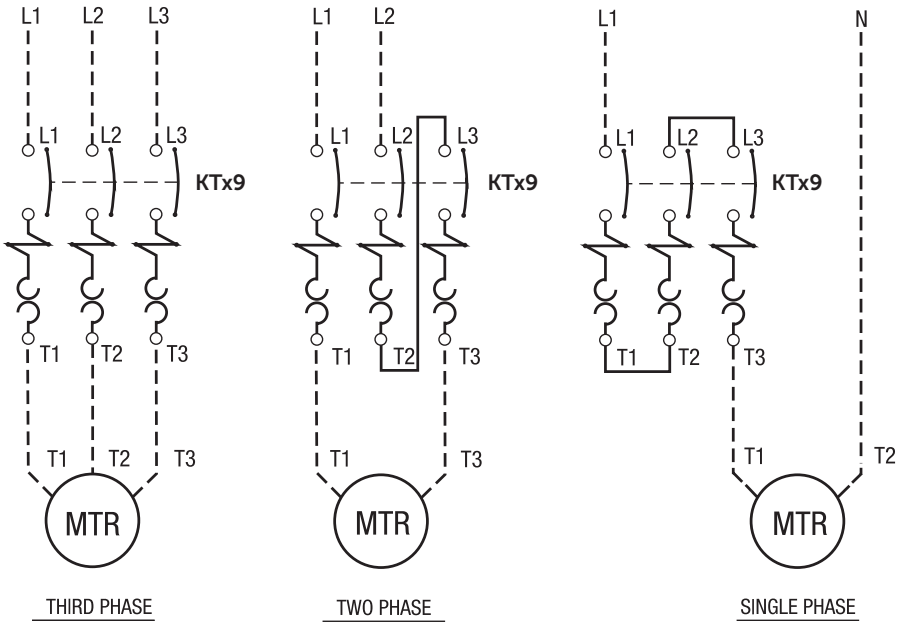

Type E/F Combination Controller Full Voltage Non-Reversing

AC Control with D7 Series Pilot Devices

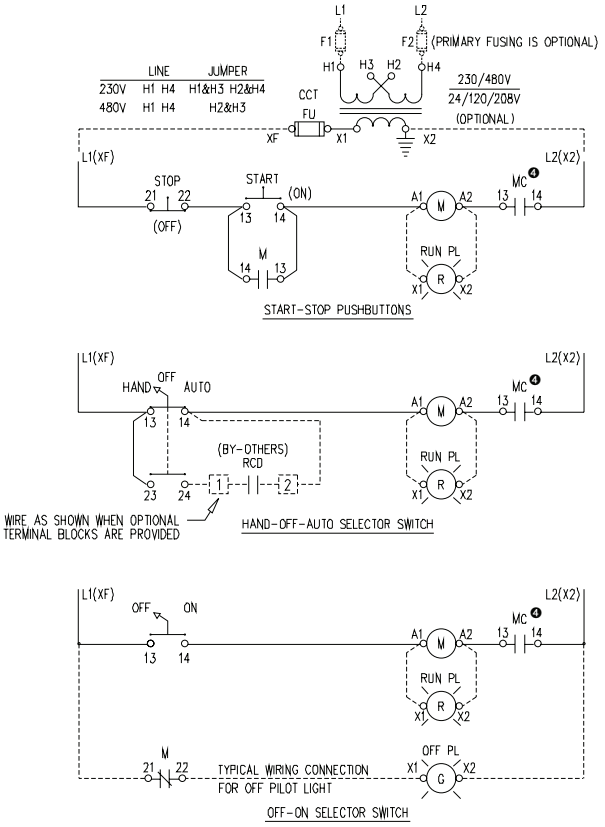

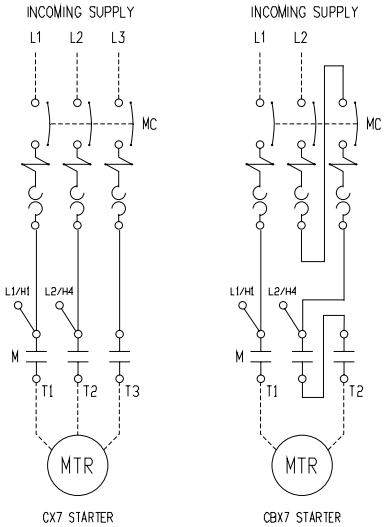

NOTES:
1) RCD: STANDS FOR REMOTE CONTROL DEVICE BY CUSTOMER
2) MC: KT9 :TYPE E* MOTOR CONTROLLER
3) X2 TERMINAL GROUNDED AS STANDARD, REMOVE GROUND IF NOT REQUIRED
4) TYPICAL FOR CONTROL CIRCUITS 300V AC OR LESS

IRED

KTA9 Type E/F Combination 3-PH FVNR Duplex Alternating Panel

with H-O-A, Lead, Lag and Stop 1-Pole Float Switches

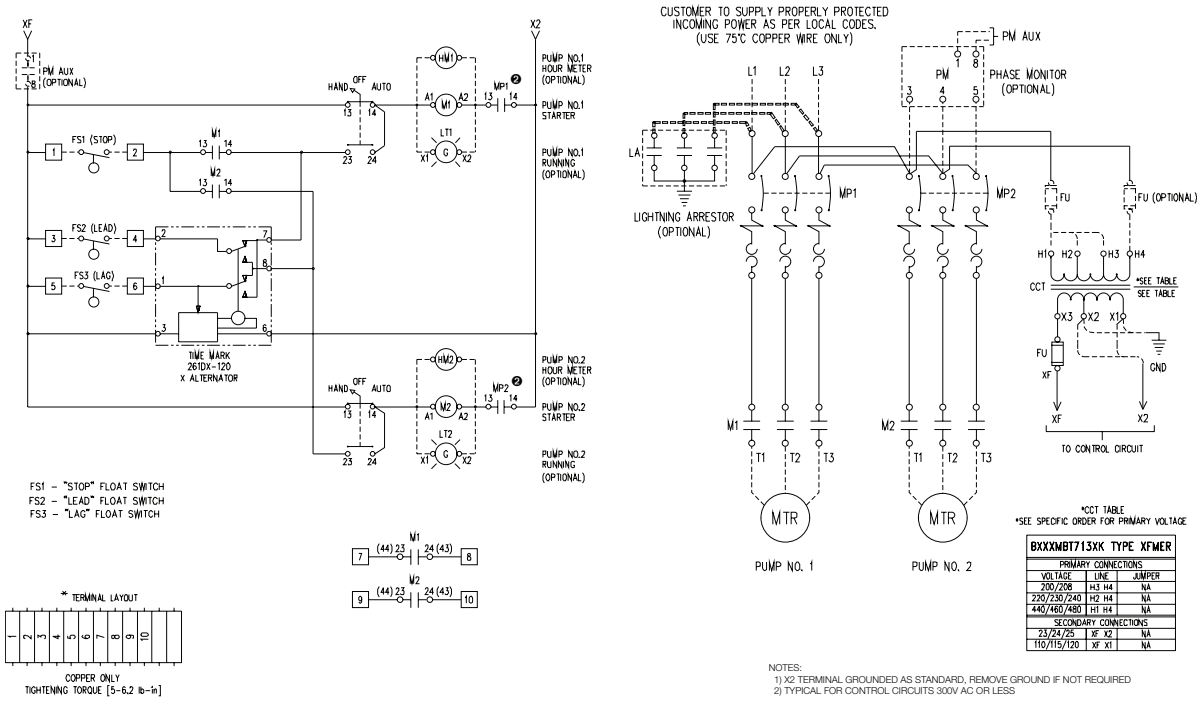

*CCT TABLE
*SEE SPECIFIC ORDER FOR PRIMARY VOLTAGE

BXXXMBT713XK TYPE XFMER		
PRIMARY CONNECTIONS		
VOLTAGE	LINE	JUMPER
200/208	H3 H4	NA
220/230/240	H2 H4	NA
440/460/480	H1 H4	NA
SECONDARY CONNECTIONS		
23/24/25	XF X2	NA
110/115/120	XF X1	NA

NOTES:
1) X2 TERMINAL GROUNDED AS STANDARD, REMOVE GROUND IF NOT REQUIRED
2) TYPICAL FOR CONTROL CIRCUITS 300V AC OR LESS

KTA9 Type E/F Combination 3-PH FVNR Duplex Alternating Panel

with H-O-A, Alarm Circuit, Lead, Lag, Stop, 1-Pole Float Switches

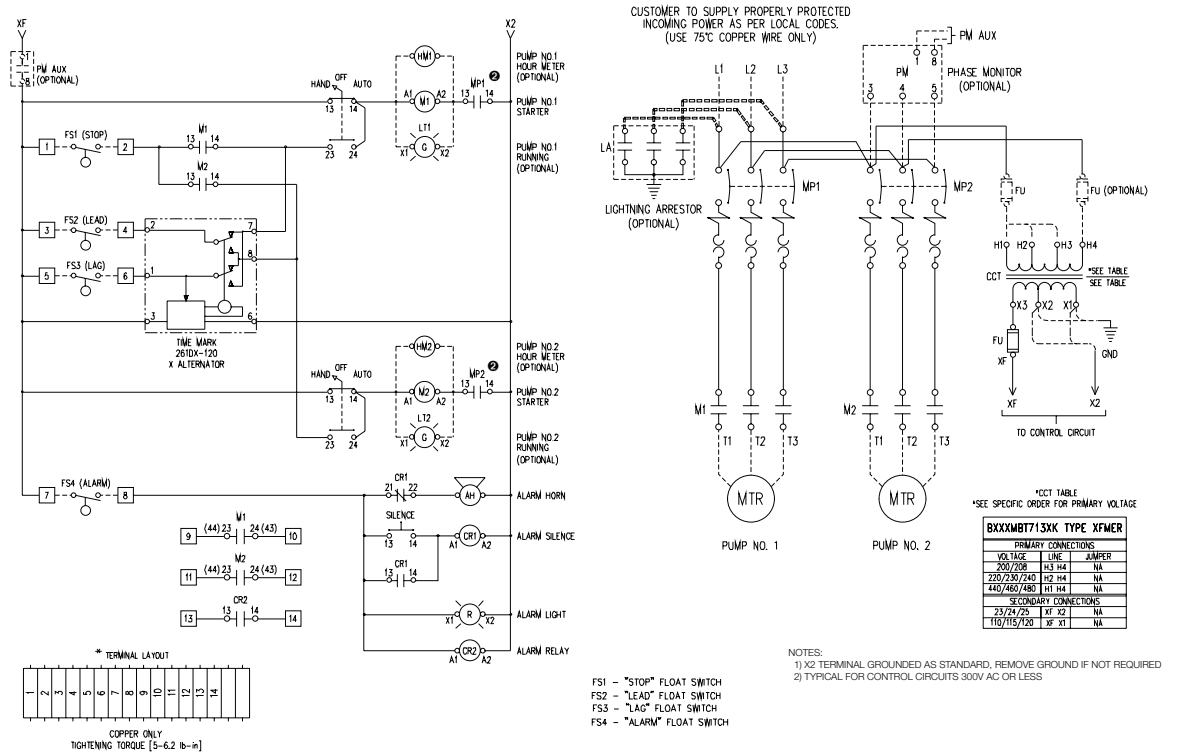

*CCT TABLE
*SEE SPECIFIC ORDER FOR PRIMARY VOLTAGE

BXXXMBT713XK TYPE XFMER		
PRIMARY CONNECTIONS		
VOLTAGE	LINE	JUMPER
200/208	H3 H4	NA
220/230/240	H2 H4	NA
440/460/480	H1 H4	NA
SECONDARY CONNECTIONS		
23/24/25	XF X2	NA
110/115/120	XF X1	NA

NOTES:
1) X2 TERMINAL GROUNDED AS STANDARD, REMOVE GROUND IF NOT REQUIRED
2) TYPICAL FOR CONTROL CIRCUITS 300V AC OR LESS

ECombo/EComboPlus/CX7 KWIKstarters Non-Reversing

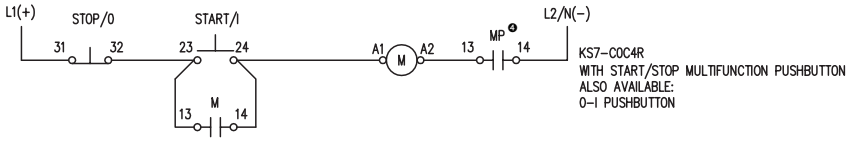

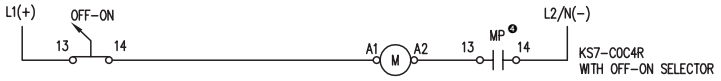

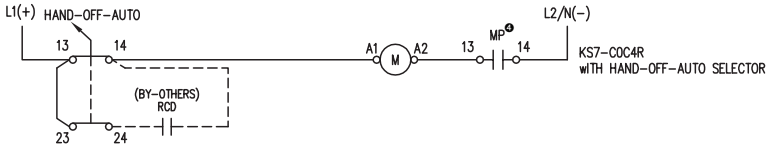

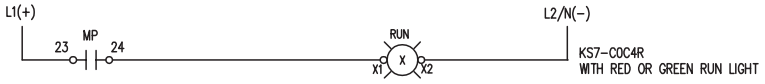

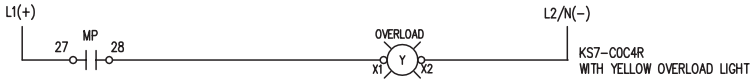

CUSTOMER TO SUPPLY PROPER BRANCH CIRCUIT PROTECTION AS PER LOCAL CODES. (USE 75°C COPPER WIRE ONLY)

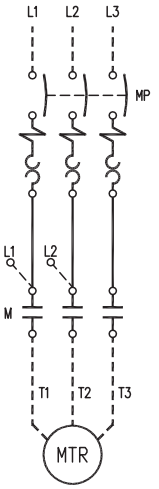

CX7

NOTES:
1) MP: KT9 "TYPE E" MOTOR CONTROLLER
2) DO NOT CONNECT A1-A2 TO L1-L2 UNLESS COIL VOLTAGE MATCHES LINE VOLTAGE
3) OPTIONAL RUN LIGHT, MAYBE RED OR GREEN
4) TYPICAL FORCONTROL CIRCUITS 300V AC OR LESS

ECombo/EComboPlus/CXU7 KWIKstarters Reversing

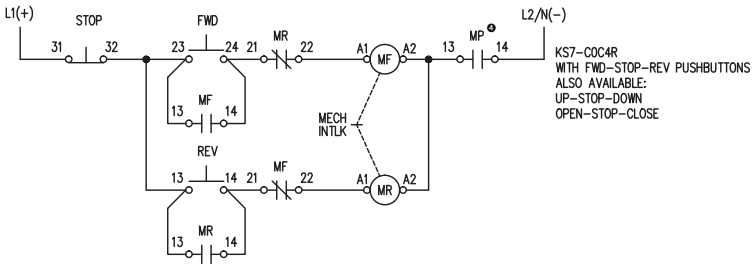

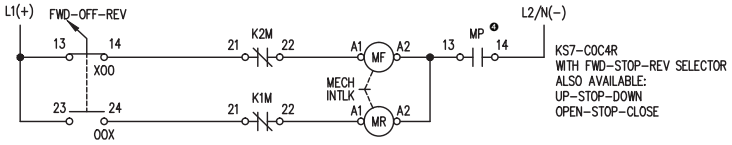

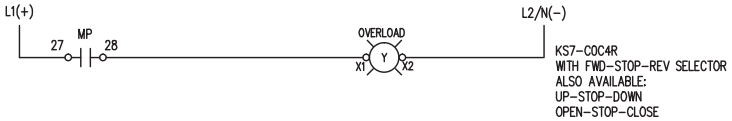

CUSTOMER WILL PROVIDE BRANCH CIRCUIT PROTECTION (F1)
SEE THE APPLICATION INSTRUCTION SHEET – COMPONENT SELECTION TABLES FOR MAX. FUSE SIZE, CLASS, AND APPLICABLE SHORT CIRCUIT RATING
(USE 75°C COPPER WIRE ONLY)

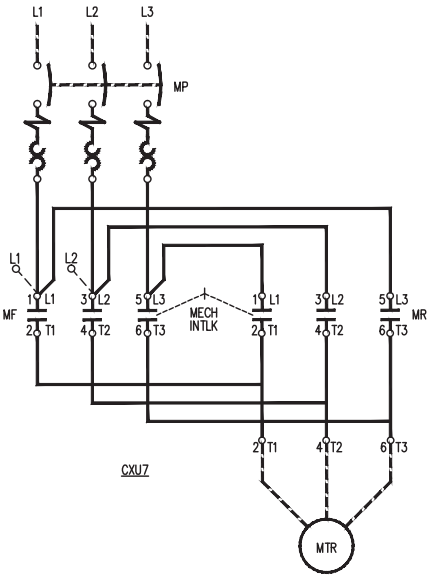

CXU7

NOTES:
1) MECHANICAL INTERLOCK
2) MP: KT9 "TYPE E" MOTOR CONTROLLER
3) DO NOT CONNECT A1-A2 TO L1-L2 UNLESS COIL VOLTAGE MATCHES LINE VOLTAGE
4) TYPICAL FORCONTROL CIRCUITS 300V AC OR LESS

CX7/CXU7 KWIKstarter Enclosure KS7-COC4R *(Dimension Code Q4)*

Dimensions are in decimal inches. Dimensions not intended for manufacturing purposes.

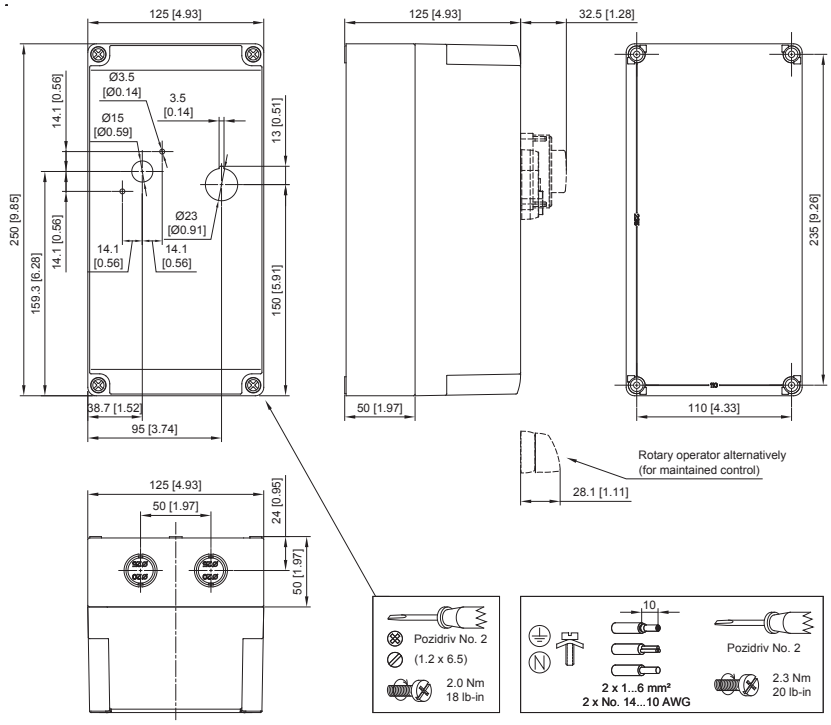

Enclosure Dimensions

Dimensions are in decimal inches. Dimensions not intended for manufacturing purposes. See dimension drawings on next page.

TYPE 4/4X/12K - IP66 ENCLOSURE

Encl. ID Dim.	Figure No.	Enclosure Size A	Enclosure Size B	Enclosure Size C	Mtg Depth D	Mtg Centers E	Mtg Centers F	Panel Size Sub-Pan	Panel Size Sub-Pan
AY	1	6.4	3.9	4.90	N/A	N/A	5.6	N/A	N/A

TYPE-4/4X/12 ENCLOSURE

Encl. ID Dim.	Figure No.	Enclosure Size A	Enclosure Size B	Enclosure Size C	Mtg Depth D	Mtg Centers E	Mtg Centers F	Panel Size Sub-Pan	Panel Size Sub-Pan
Q5	2	7.00	5.03	5.02	4.3	4.21	6.18	N/A	N/A
Q6	3	7.00	7.00	6.02	5.3	6.18	6.18	N/A	N/A
Q7	4	11.87	7.31	10.6	7.23	6.54	11.10	N/A	N/A

TYPE-4/12 & 12 ENCLOSURES

Encl. ID Dim.	Figure No.	Enclosure Size A	Enclosure Size B	Enclosure Size C	Mtg Depth D	Mtg Centers E	Mtg Centers F	Panel Size Sub-Pan	Panel Size Sub-Pan	H
W6	5	9.84	7.87	8.24	5.31	5.31	9.13	9.09	7.13	-
W7	5	13.78	11.81	10.2	7.28	9.25	13.07	13.03	11.06	-
L	6	8	6	6	5.53	4	8.75	6.75	4.88	9.5

TYPE 4/7/9 ENCLOSURES

Encl. ID Dim.	Figure No.	Mtg. Dim. A	Mtg. Dim. B	Mtg. Dim. C	Inside Dim. D	Outside Dim. E	Outside Dim. F	Outside Dim. G	Outside Dim. H	Conduit Entry Top & Bot
EX	7	3.25	7.75	3.5	6.0	3.0	4.56	7.06	6.25	0.75
EY	7	5.50	8.50	5.50	5.50	6.0	7.0	7.0	7.38	1.0
EZ	8	9.13	4.50	6.0	8.0	6.63	9.25	11.25	9.34	1.50

Enclosures

See Enclosure Dimension Charts on Previous Page.

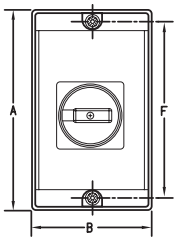

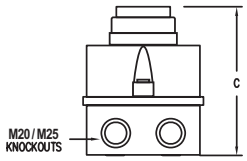

FIGURE NO. 1

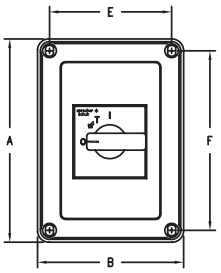

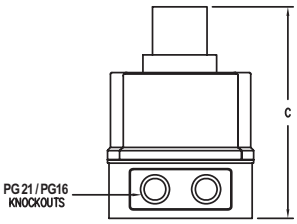

FIGURE NO. 2

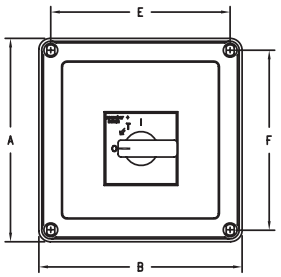

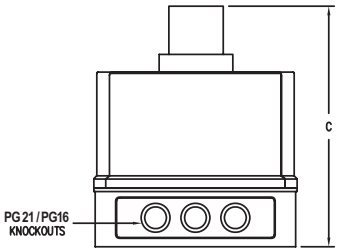

FIGURE NO. 3

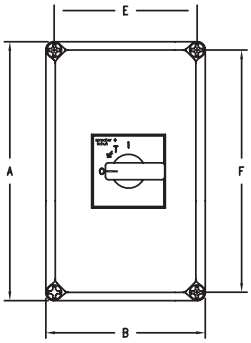

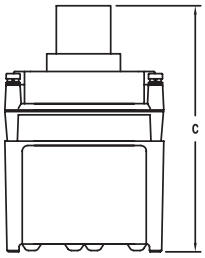

FIGURE NO. 4

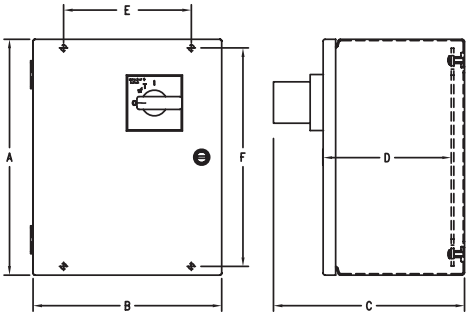

TYPE 4/12
FIGURE NO. 5

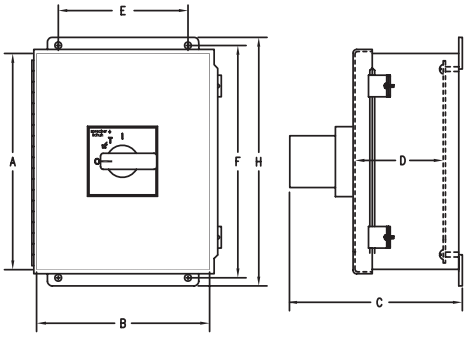

TYPE 12
FIGURE NO. 6

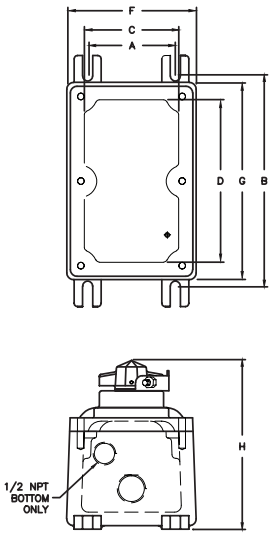

FIGURE NO. 7

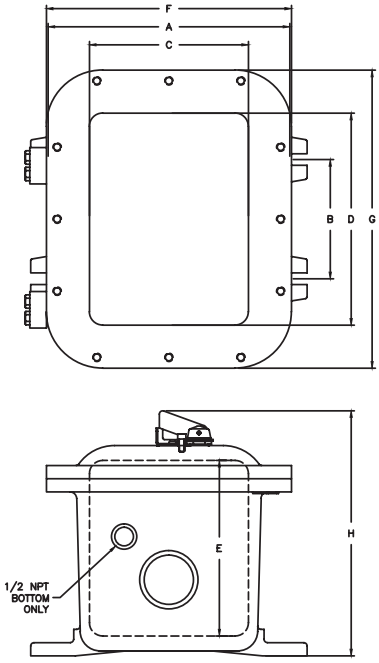

FIGURE NO. 8

Series KT5 Manual Motor Controllers

Versatile, convenient and space saving... for a variety of applications

Sprecher+Schuh's KT5 Manual Motor Controllers are UL Listed as Manual Motor Controllers with optional approvals for Suitable as Motor Disconnect and Suitable for use in Group Installation.

Group motor installations eliminate the need for individual branch short circuit protective devices for each motor circuit, reducing panel space, installation & wiring time, and costs. There is only one Branch Circuit Protective Device (BCPD) for the "Group".

According to UL 60947-4-1, CSA C22.2 No.60947-4-1, these devices may provide the following control and protection functions.

- Disconnect for Motor Branch Circuit
- Manual Switching (Motor control means)
- Overload Protection (Thermal Protection)

These devices meet requirement of Motor Protective Switching Devices (MPSD) according to IEC 60947-4-1 and Circuit Beaker according to IEC 60947-2 standard for application outside of North America.

These devices provide the following functions.

- Disconnect for Motor Branch Circuit
- Magnetic Short-circuit Protection
- Thermal Overload Protection
- Manual Switching (Motor control means)

KT5 devices provide trip class 10A overload protection and phase loss sensitivity protection. These are suitable for single- and three-phase applications.

Group Installation with MPCBs

There is only one Branch Circuit Protective Device (BCPD) for the "Group". Group installation has been successfully used for many years in the U.S. and Canada. It allows "two motors or one or more motors and other loads to be connected to the same branch-circuit…" The most restrictive part of the conditions specified for Group Installation is the requirement for the protection of the conductors for each motor circuit.

The image below shows an example that illustrates installations involving multiple motors with a single BCPD protecting the entire "Group".

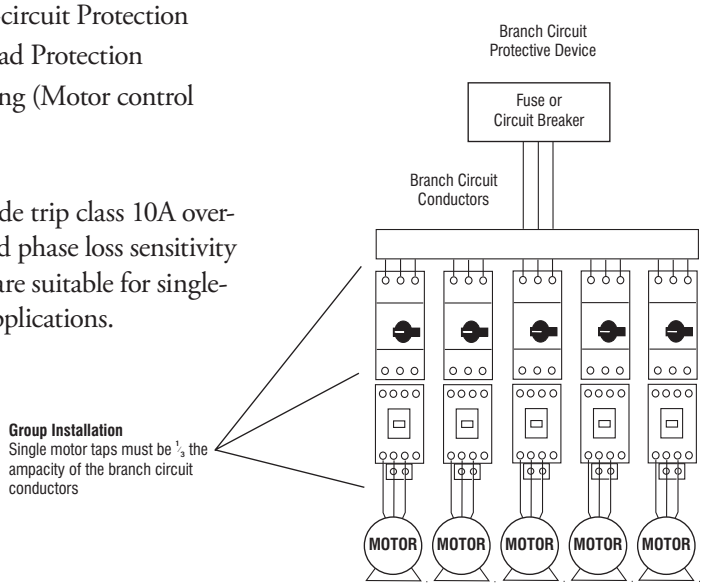

KTA5 Manual Motor Controllers

Max. kW, 3-Phase — AC-3 ❶				Typical Three Phase [HP] ❶				Max. Short Circuit Current (kA)		Current Adjustment Range [A]	Magnetic Release Response Current [A]	Catalog Number
								400V	480V			
230V	400/415V	500V	690V	200V	230V	460V	575V	(I_{cu})	(group motor)			
~	0.02	0.06	0.06	~	~	~	~	100	30	0.10...0.16	2	**KTA5-32A-0.16A**
~	0.04	0.09	0.09	~	~	~	~	100	30	0.16...0.25	3.1	**KTA5-32A-0.25A**
0.06	0.09	0.12	0.18	~	~	~	0.25	100	30	0.25...0.40	5	**KTA5-32A-0.4A**
0.09	0.18	0.18	0.25	~	~	0.25	0.33	100	30	0.40...0.63	7.9	**KTA5-32A-0.63A**
0.18	0.25	0.37	0.55	~	~	0.5	0.75	100	30	0.63...1.0	12.5	**KTA5-32A-1.0A**
0.25	0.55	0.75	1.1	0.25	0.33	1	1	100	30	1.0...1.6	20	**KTA5-32A-1.6A**
0.37	0.75	1.1	1.8	0.5	0.75	1.5	2	75	30	1.6...2.5	31.3	**KTA5-32A-2.5A**
0.75	1.5	2.2	3	1	0.75	3	3	75	18	2.5...4.0	50	**KTA5-32A-4.0A**
1.5	2.2	3	4	1.5	2	5	5	75	18	4.0...6.3	78.8	**KTA5-32A-6.3A**
2.2	4	6.3	7.5	3	3	7.5	10	75	18	6.3...10	150	**KTA5-32A-10A**
3	5.5	6.3	7.5	3	3	7.5	10	50	18	8.0....12	180	**KTA5-32A-12A**
4	7.5	10	13	5	5	10	15	15	18	10...16	240	**KTA5-32A-16A**
5.5	10	11	17	5	7.5	15	20	15	18	16...20	300	**KTA5-32A-20A**
5.5	11	15	22	7.5	7.5	20	20	15	18	20...25	375	**KTA5-32A-25A**
7.5	15	20	25	7.5	10	25	30	15	18	25...32	480	**KTA5-32A-32A**

Horsepower ratings shown in the table are for reference only.
The final selection of the controller depends on the actual motor full load current and service factor.

- *For motor with service factor less than 1.15.* Use motor nameplate full load current times 0.9 and choose the motor starter with the appropriate current range.
  Example: Motor F.L.C. = 4.2A; S.F. = 1.0. – 4.2A x 0.9 = 3.78A.
  Select Catalog Number KTA5-32A-4.0A

KTA5 Selection Using Interrupting Rating/Breaking Capacity

Catalog Number	Breaking Capacity, IEC 60947-2														
	230V AC			400V AC			440V AC			500V AC			690V AC		
	I_{cs} [kA]	I_{cu} [kA]	Back-up Fuse Rating ❷ [A]	I_{cs} [kA]	I_{cu} [kA]	Back-up Fuse Rating ❷ [A]	I_{cs} [kA]	I_{cu} [kA]	Back-up Fuse Rating ❷ [A]	I_{cs} [kA]	I_{cu} [kA]	Back-up Fuse Rating ❷ [A]	I_{cs} [kA]	I_{cu} [kA]	Back-up Fuse Rating ❷ [A]
KTA5-32A-0.16A	50	100	~❸	50	100	~❸	30	100	~❸	30	100	~❸	30	100	~❸
KTA5-32A-0.25A	50	100		50	100		30	100		30	100		30	100	
KTA5-32A-0.4A	50	100		50	100		30	100		30	100		30	100	
KTA5-32A-0.63A	50	100		50	100		30	100		30	100		30	100	
KTA5-32A-1.0A	50	100		50	100		30	100		30	100		30	100	
KTA5-32A-1.6A	50	100		50	100		30	100		30	100		30	100	
KTA5-32A-2.5A	50	75		50	75		10	30	25 ❹	10	20	25 ❹	5	10	25 ❹
KTA5-32A-4.0A	50	75		50	75		6	18	25 ❹	6	15	25 ❹	2	3	25 ❹
KTA5-32A-6.3A	50	50		50	50		6	18	63 ❹	6	10	63 ❹	2	3	40 ❹
KTA5-32A-10A	50	50		50	50		6	18	63 ❹	6	10	63 ❹	2	3	50 ❹
KTA5-32A-12A	25	50	80 ❹	25	50	80 ❹	6	15	63 ❹	6	10	63 ❹	2	3	50 ❹
KTA5-32A-16A	15	15	80 ❹	15	15	80 ❹	4	6	63 ❹	4	6	63 ❹	2	3	63 ❹
KTA5-32A-20A	10	15	125 ❹	10	15	125 ❹	3	6	125 ❹	3	6	125 ❹	2	3	80 ❹
KTA5-32A-25A	10	15	125 ❹	10	15	125 ❹	3	6	125 ❹	3	6	125 ❹	2	3	100 ❹
KTA5-32A-32A	10	15	125 ❹	10	15	125 ❹	3	6	125 ❹	3	6	125 ❹	2	3	100 ❹

❶ Horsepower ratings shown are for reference. The final selection of the controller depends on the actual motor full load current.
❷ Back-up fuses are type gG, aM.
❸ No back-up fuse required if Icc<Ics.
❹ Rated back-up fuse for short-circuit up to 50 kA.

Accessories for KT5

Accessory	Description	Auxiliary N.O	Auxiliary N.C	Connection Diagram and Terminal Markings ❷	For Use With	Pkg Qty	Catalog Number
	Front mounted Auxiliary Contact • No additional space required • 1 and 2-pole	1	1	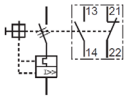	KT5	10	**KT5-PE1-11**
		1	0	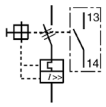			**KT5-PE1-10**
		0	1	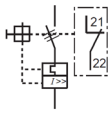			**KT5-PE1-01**
		2	0	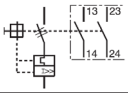			**KT5-PE1-20**
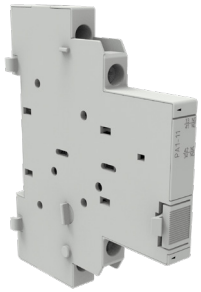	**Right-side-mounted Auxiliary Contact** • 2-pole • Adds 9 mm to the width of the Manual Motor Starter • Use compact bus bars with 54 mm spacing	1	1	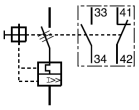	KT5	2	**KT5-PA1-11**
		2	0	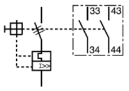			**KT5-PA1-20**
		0	2	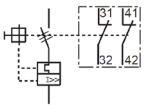			**KT5-PA1-02**
		Lead Contacts 2	0	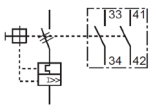			**KT5-PA1-20L**

Trip Contacts

Accessory	Description	Auxiliary Contacts N.O	Auxiliary Contacts N.C	Connection Diagram and Terminal Markings ❷	For Use With	Pkg Qty	Catalog Number
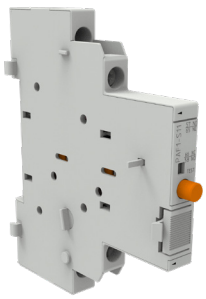	**Right-side-mounted Trip Signaling Contact** • 2-pole • Adds 9 mm to the width of the Manual Motor Starter • Use compact bus bars with 54 mm spacing	1	1	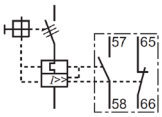	KT5	2	**KT5-PAF1-S11**
		2	0	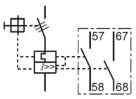			**KT5-PAF1-S20**
		0	2	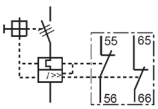			**KT5-PAF1-S02**

Accessories for KT5

Accessory	Description	Connection Diagram	AC Coil Voltage	Pkg Qty	For Use With	Catalog Number
	Undervoltage Trip Release • Left-side mounted • Adds 18 mm to the width of the Manual Motor Starter	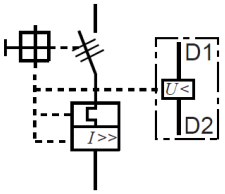	20V, 50 Hz/ 24V, 60 Hz	1	KT5	**KT5-UA-24V**
			24V, 50 Hz			**KT5-UA-28V**
			48V, 50 Hz			**KT5-UA-48V**
			60V, 50 Hz			**KT5-UA-60V**
			110V, 50 Hz/ 120V, 60 Hz			**KT5-UA-120V**
			208V, 60 Hz			**KT5-UA-208V**
			230V, 50 Hz/ 240V, 60 Hz			**KT5-UA-240V**
			400V, 50 Hz			**KT5-UA-400V**
			415V, 50 Hz/ 480V, 60 Hz			**KT5-UA-480V**
			575V, 60 Hz			**KT5-UA-575V**
	Shunt Trip Release • Left-side mounted • Adds 18 mm to the width of the Manual Motor Starter	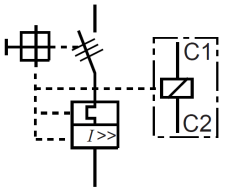	20-24 V, 50/60 Hz	1	KT5	**KT5-AA-24V**
			110V, 50/60 Hz			**KT5-AA-110V**
			200...240V, 50/60 Hz			**KT5-AA-240V**
			350...415V, 50/60 Hz			**KT5-AA-415V**

Bus Bars

Accessory	Description	Connection Diagram	Terminal Links	Pkg Qty	For Use With	Catalog Number
	Compact Bus Bars • UL: 600V, 60 A • IEC: 690V, 65 A	• 45 mm spacing • For use with front-mounted auxiliary contact	2 x 3 connections	10	KT5	**KT5-32-DB-45-2**
			3 x 3 connections			**KT5-32-DB-45-3**
			4 x 3 connections			**KT5-32-DB-45-4**
			5 x 3 connections			**KT5-32-DB-45-5**
		• 54 mm spacing • For use with side-mounted auxiliary contact	2 x 3 connections	10	KT5	**KT5-32-DB-54-2**
			3 x 3 connections			**KT5-32-DB-54-3**
			4 x 3 connections			**KT5-32-DB-54-4**
			5 x 3 connections			**KT5-32-DB-54-5**
		• 63 mm spacing • For use with side-mounted trip release	2 x 3 connections	10	KT5	**KT5-32-DB-63-2**
			3 x 3 connections			**KT5-32-DB-63-3**
			4 x 3 connections			**KT5-32-DB-63-4**
			5 x 3 connections			**KT5-32-DB-63-5**
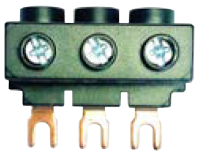	**Bus Bar Feeder Terminal (Flat)** • Supply of compact bus bars • Increases terminal capacity			10	KT5-32-DB	**KT5-32-A3N**
	Bus Bar Feeder Terminal (High) • Supply of compact bus bars • Increases terminal capacity			10		**KT5-32-A3NH**

Connecting Modules

Accessory	Description	Pkg Qty	For Use With	Catalog Number
	Connecting Module - 12 A • For DOL Starters • Starters mount on single DIN Rail (KT5 on DIN rail) • Electrical and mechanical interconnection of KT5 and CA8 Contactors	1	KT5 to CA8	**KT5-32-PEK12**
	Connecting Module - 25 A • For DOL Starters • Starters mount on single DIN Rail (KT5 on DIN rail) • Electrical and mechanical interconnection of KT5 and CA7 Contactors	1	KT5 to CA7-9...23	**KT5-32-PEC23**

Accessories for KT5

Accessory	Description	Color	Legend	For Use with	Pkg Qty	Catalog Number
	Blank Space Cover • For covering unused terminal links • Must be ordered in multiples of 10 (10pcs/pkg)	Gray/Black		KT5	50	**KT5-WSN**
	Screw Adapter • For screw arrangement of a motor protection circuit breaker (1 pkg of 10) • Hat (DIN) Rail 35 x 7.5 mm • 44 mm length	Red/Yellow		KT5	10	**KT5-N45**
	Enclosure • Up to three padlocks in OFF position • Protection Class: IP65; UL/CSA Type 12	Red/Yellow	O - I OFF -ON Trip	KT5	1	**KT5-ENY65**
		Black Handle				**KT5-ENN65**
	Door Mounting Kit • Up to three padlocks in OFF position • Protection Class: IP65; UL/CSA Type 12	Red/Yellow	O - I OFF -ON Trip	KT5	1	**KT5-DMY65**
		Black Handle				**KT5-DMN65**
	Door Coupling Handle • Up to three padlocks in OFF position • Defeatable	Red/Yellow	O - I OFF -ON Trip	KT5	1	**KT5-HCRY**
		Black/Black	O - I OFF - ON Trip		1	**KT5-HTC**
	Coupler • Coded - Positioning of ON indication dependent from mounting orientation of the KT5	Driver with screw		KT5	1	**KT5-DNC**
	• Uncoded - Positioning of ON indication independent from mounting orientation of the KT5	Driver without coding, with screw				**KT5-DNUC**
	Shaft Alignment Ring • Supports the long shafts for alignment to the handle inlet. It makes closing panel doors easier • Use for shafts			KT5	1	**KT5-SAR**
	Extension Shaft	105 mm (4.13 in.)		KT5	10	**KT5-HT**
		180 mm (7.1 in.)				**KT5-HTM**
	Extension Shaft Support • Supports the shaft in the extension of handle (KT5-HTC/KT5-HTRY) • Required for shaft lengths >130 mm (5.1 in.) • Snaps on the right side of the KT5 controller • Width 9 mm. • For use with screw-mounted or hat rail mounted devices.			KT5	1	**KT5-SHS**
	Lockable Handle Accessory • For locking KT5 devices in the OFF position			KT5	10	**KT5-KN**

KTA5 Explosion Proof Motor Controllers - NEMA Type 7/9

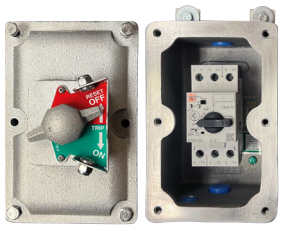

Amp / Horsepower Rating							
Max. Horsepower ❶❷ Three Phase				O/L Relay Ampere Range	Magnetic Res. Current	Catalog Number	Dim Code
200V	230V	460V	575V				
KTA5-32A Standard Interrupting Capacity							
~	~	~	~	0.10...0.16	2	**KTA5-32A-0.16A-EX**	EX
~	~	~	~	0.16...0.25	3.1	**KTA5-32A-0.25A-EX**	EX
~	~	~	0.25	0.25...0.40	5	**KTA5-32A-0.40A-EX**	EX
~	~	0.25	0.33	0.40...0.63	7.9	**KTA5-32A-0.63A-EX**	EX
~	~	0.5	0.75	0.63...1.0	12.5	**KTA5-32A-1.0A-EX**	EX
0.25	0.33	1	1	1.0...1.6	20	**KTA5-32A-1.6A-EX**	EX
0.5	0.75	1.5	2	1.6...2.5	31.3	**KTA5-32A-2.5A-EX**	EX
1	0.75	3	3	2.5...4.0	50	**KTA5-32A-4.0A-EX**	EX
1.5	2	5	5	4.0...6.3	78.8	**KTA5-32A-6.3A-EX**	EX
3	3	7.5	10	6.3...10	150	**KTA5-32A-10A-EX**	EX
3	3	7.5	10	8.0...12	180	**KTA5-32A-12A-EX**	EX
5	5	10	15	10...16	240	**KTA5-32A-16A-EX**	EX
5	7.5	15	20	16...20	300	**KTA5-32A-20A-EX**	EX
7.5	7.5	20	20	20...25	375	**KTA5-32A-25A-EX**	EX
7.5	10	25	30	25...32	480	**KTA5-32A-32A-EX**	EX

Includes:

- Class I, Div 1, 2, Group C, D
  Class II, Div 1, 2, Group E, F & G enclosure
  Class III
  NEMA Type 7/9
- KTA5 Manual Motor Controller

Modifications (Factory Assembled)

Description	Add Suffix to Cat. Number
KT5 Auxiliaries & Trip Contacts, Front Mount 250V max.	
1 NO Auxiliary	**-B**
1 NC Auxiliary	**-A**
1 NO + 1 NC Auxiliary	**-C**
2 NO Auxiliaries	**-D**
Side Mount 600V max.	
2 NC Auxiliaries	**-AS02**
2 NO Auxiliaries	**-AS20**
1 NO + 1 NC Auxiliary	**-AS11**
Enclosure Modifications	
Breather/Drain	**-BD**

❶ **Horsepower ratings shown in the table above are for reference.** ***The final selection of the controller depends on the actual motor full load current and service factor.***

- For motor with service factor less than 1.15. Use motor nameplate full load current times 0.9 and choose the motor starter with the appropriate current range. Example: Motor FLC = 4.2A; S.F. = 1.0. 4.2A x 0.9 = 3.78A. Select catalog number KTA5-32A-4.0A.

❷ KTA5 may be applied to single phase loads if 3 poles of device are wired in series. See footnote 1 for device selection criteria.

❸ -UA✱ and -AA✱ options not possible in the -EX Enclosure.

Technical Information

Standards Compliance		IEC	IEC/EN 60947-2, IEC/EN 60947-4-1, IEC/EN 60947-1
		cULus	UL 60947-1, UL 60947-4-1
Certification		Global	RINA (Marine)
		Regional	CCC, KC, EAC, CE, IEC, cULus, CB Scheme
Rated Operating Voltage		IEC [V]	690
		UL, CSA [V]	600
Rated Impulse Withstand Voltage		Main Circuits	6kV
		Auxillary Circuits	6kV
Rated Frequency		[Hz]	50...60
Rated Operating Current		[A]	0.1...32 (15 ranges)
Number of Operations	Mechanical	[operations]	100,000 Cycles
	Electrical	[operations]	100,000 Cycles (0.1...16A); 50,000 Cycles (20...32A)
Ambient Temperature			
	Storage		-50...+80ºC (-58...+176ºF)
	Operating	Open-compensated	-25...+55ºC (-13...+131ºF) ❶
		Open	-25...+70ºC (-13...+158ºF) ❶
		Enclosed	0...+40ºC (32...104ºF)
Maximum Operating Altitude Permissable			2000m
Pollution Degree			3
Phase loss sensitivity			Yes
Disconnect Function per IEC/60947-2			Yes
Resistance to shock per IEC 60068-2-27			25g/11ms
Resistance to vibration per IEC 60068-2-6			5g/3...150Hz
Minimum distance to other units same type		Horizontal	0 mm (0 in.)
		Vertical	150 mm (5.9 in.)
Minimum Distance to Electrical Conductive Bus Bar		Horizontal, up to 400V	0mm (0 in.)
		Vertical, up to 690V	> 1.5mm (0.06 in.)
Degree of Protection		Housing	IP20
		Mwain Terminal	IP10
Utilization Category		IEC 60947-2 (Circuit breaker)	A
		IEC 60947-4-1 (Motor Starter)	AC-3
Power Loss in all three poles up to:		0.16...1.6A	5.1 W
		2.5...6.3A	5.4 W
		10...12A	7.2 W
		16...25A	8.4 W
		32A	9.3 W

Terminal Connections

Connection			No. of Conductors	Devices Rated ≤ 16 A	Devices Rated 20...32 A
Type of terminals				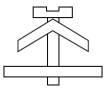	
Connection Screw				M3.5/Pozidriv No.2	M4/Pozidriv No.2
Wiring	Solid		1 or 2	1...4 mm^2	1...2.5 mm^2
					2.5...6 mm^2
	Flexible with ferrule	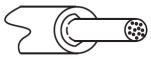	1 or 2	0.75...2.5 mm^2	0.75...6 mm^2
	Flexible		1 or 2	0.75...2.5 mm^2 / No. 16...12 AWG	1.5...2.5 mm^2 / No.16...8 AWG
					2.5...6 mm^2 / No.16...8 AWG
	Stranded per UL/CSA		1 or 2	1...4 mm^2 / No. 16...12 AWG	1...2.5 mm^2 / No.16...8 AWG
					2.5...6 mm^2 / No.16...8 AWG
	Stripping length			9 mm (0.35 in.)	10 mm (0.39 in.)
Tightening torques				0.8...1.2 N•m / 7...10 lb•in	2 N•m / 18 lb•in

❶ With derating. See UL/CSA Listed Applications ratings table on page F120.7

UL/CSA Listed Application Ratings, Only

Catalog Number	UL 60947-4-1 — Manual Motor Controller				
	Branch Circuit Protection Max. Size per NEC/CEC [A]	Max. Short Circuit Current [kA]			
		Motor Disconnect		Group Installation	
		480V	600V	480V	600V
KTA5-32A-0.16A	175	30	5	30	5
KTA5-32A-0.25A	175	30	5	30	5
KTA5-32A-0.4A	175	30	5	30	5
KTA5-32A-0.63A	175	30	5	30	5
KTA5-32A-1.0A	175	30	5	30	5
KTA5-32A-1.6A	175	30	5	30	5
KTA5-32A-2.5A	175	30	5	30	5
KTA5-32A-4.0A	175	18	5	18	5
KTA5-32A-6.3A	175	18	5	18	5
KTA5-32A-10A	175	18	5	18	5
KTA5-32A-12A	175	18	5	18	5
KTA5-32A-16A	175	18	5	18	5
KTA5-32A-20A	400	18	5	18	5
KTA5-32A-25A	400	18	5	18	5
KTA5-32A-32A	400	18	5	18	5

Type 1 Application Ratings, KT5 to CA8 Miniature Contactors

Catalog Number	UL 60947-4-1 — Manual Motor Controller					
	Max. Fuse or Circuit Breaker Size per NEC [A]	Contactor ❶	Max. Short Circuit Current [kA]			
			Motor Disconnect		Group Installation	
			480V	600V	480V	600V
KTA5-32A-0.16A	175	CA8-09	30	5	30	5
KTA5-32A-0.25A	175	CA8-09	30	5	30	5
KTA5-32A-0.4A	175	CA8-09	30	~	30	~
KTA5-32A-0.63A	175	CA8-09	30	~	30	~
KTA5-32A-1.0A	175	CA8-09	30	~	30	~
KTA5-32A-1.6A	175	CA8-09	30	~	30	~
KTA5-32A-2.5A	175	CA8-09	30	~	30	~
KTA5-32A-4.0A	175	CA8-09	18	~	18	~
KTA5-32A-6.3A	175	CA8-12	18	~	18	~
KTA5-32A-10A	175	CA8-12	18	~	18	~
KTA5-32A-12A	175	CA8-12	18	~	18	~
KTA5-32A-16A	175	CA8-12	18	~	18	~

❶ May be used with KT5-32-PEK12 connecting module between KTA5-32A-__A manual motor controller and CA8 contactor.

Application Ratings, KT5 to CA7 Contactors

Catalog Number	UL 60947-4-1 — Manual Motor Controller					
	Max. Fuse or Circuit Breaker Size per NEC [A]	For Use With Contactor Cat. No.	Max. Short Circuit Current [kA]			
			Motor Disconnect		Group Installation	
			480V	600V	480V	600V
KTA5-32A-0.16A	175	CA7-9	30	5	30	5
KTA5-32A-0.25A	175	CA7-9	30	5	30	5
KTA5-32A-0.4A	175	CA7-9	30	5	30	5
KTA5-32A-0.63A	175	CA7-9	30	5	30	5
KTA5-32A-1.0A	175	CA7-9	30	5	30	5
KTA5-32A-1.6A	175	CA7-9	30	5	30	5
KTA5-32A-2.5A	175	CA7-9	30	5	30	5
KTA5-32A-4.0A	175	CA7-9	18	5	18	5
KTA5-32A-6.3A	175	CA7-9	18	5	18	5
KTA5-32A-10A	175	CA7-9	18	5	18	5
KTA5-32A-12A	175	CA7-12	18	5	18	5
KTA5-32A-16A	175	CA7-16	18	5	18	5
KTA5-32A-20A	400	CA7-23	18	5	18	5
KTA5-32A-25A	400	CA7-30	18	5	18	5
KTA5-32A-32A	400	CA7-30	18	5	18	5

Type 2 Coordination Ratings, KT5 to CA7 Contactors, Standard Motor Protection

Catalog Number	IEC 60947-4-1		UL 60947-4-1					
	400/415V		480V			600V		
	Max. Short Circuit Current [kA]	For Use With Contactor Cat. No.	Max. Fuse or Circuit Breaker Size per NEC [A]	Max. Short Circuit Current [kA]	For Use With Contactor Cat. No.	Max. Fuse or Circuit Breaker Size per NEC [A]	Max. Short Circuit Current [kA]	For Use With Contactor Cat. No.
KTA5-32A-0.16A	50	CA7-9	175	30	CA7-9	175	5	CA7-9
KTA5-32A-0.25A	50	CA7-9	175	30	CA7-9	175	5	CA7-9
KTA5-32A-0.4A	50	CA7-9	175	30	CA7-9	175	5	CA7-9
KTA5-32A-0.63A	50	CA7-9	175	30	CA7-9	175	5	CA7-9
KTA5-32A-1.0A	50	CA7-9	175	30	CA7-9	175	5	CA7-9
KTA5-32A-1.6A	50	CA7-9	175	30	CA7-9	175	5	CA7-9
KTA5-32A-2.5A	50	CA7-9	175	30	CA7-12	175	5	CA7-12
KTA5-32A-4.0A	50	CA7-9	175	18	CA7-23	175	5	CA7-23
KTA5-32A-6.3A	50	CA7-9	175	18	CA7-23	175	5	CA7-23
KTA5-32A-10A	50	CA7-9	175	18	CA7-30	175	5	CA7-30
KTA5-32A-12A	25	CA7-12	175	18	CA7-30	175	5	CA7-30
KTA5-32A-16A	16	CA7-23	175	18	CA7-30	175	5	CA7-30
KTA5-32A-20A	10	CA7-30	400	18	CA7-30	400	5	CA7-30
KTA5-32A-25A	10	CA7-30	400	18	CA7-30	400	5	CA7-30
KTA5-32A-32A	10	CA7-30	400	18	CA7-30	400	5	CA7-30

Auxiliary Contact, Signaling Contact, and Short-circuit Signaling Contact Specifications

Specifications of Accessories		KT5-PA... Side-mounted Auxiliary, Signaling, and Short-circuit Signaling Contacts	KT5-PE... Front-mounted Auxiliary Contacts
Standards Compliance	IEC	IEC/EN 60947–1, IEC/EN 60947-5-1	IEC/EN 60947–1, IEC/EN 60947-5-1
	UL/cULus	UL 60947-4-1, CAN/CSA22.2 No. 60947-4-1	UL 60947-4-1, CAN/CSA22.2 No. 60947-4-1
Rated Operating Voltage	[U_e]	690V AC/600V DC	250V AC / 250V DC
Rated Thermal Current	[I_{th}]	6 A	5 A
Rated Frequency	[Hz]	50...60	50...60
Rated Impulse withstand Voltage	[U_{imp}]	6 kV	6 kV
Rated insulation voltage	[U_i]	690 V AC	250 V AC
Pollution Degree		3	3
Ambient Temperature	Operation	-25...+60 °C (-13...+140 °F)	-25...+60 °C (-13...+140 °F)
	Storage	-50...+80 °C (-58...+176 °F)	-50...+80 °C (-58...+176 °F)
Resistance to shock per IEC 60068-2-27		25g / 11 ms	25g / 11 ms
Resistance to vibrations per IEC 60068-2-6		5g / 3...150 Hz	5g / 3...150 Hz
Rated operational current I_e AC-15 per IEC/EN 60947-5-1 for utilization category	24 V, 120 V	6 A	3 A
	240 V	4 A	1.5 A
	400 V	3 A	~
	440 V, 690 V	1 A	~
Rated operational current I_e DC-13 per IEC/EN 60947-5-1 for utilization category	24 V	2 A	1 A
	125 V	0.55 A	250 V 0.27 A
	250 V	0.27 A	0.11 A
	440 V, 600 V	0.15 A	~
Minimum switching capacity		17 V DC / 5 mA	17V DC / 5 mA
Short-circuit protective device (N.O, N.C)		10 A Type gG	10 A Type gG
Duty time		100 %	100 %
Mounting		Right side	Front
Number of operations	Mechanical	50,000 cycles	50,000 cycles
	Electrical		

Contact utilization characteristics according to UL/CSA

Rated operating voltage U_e per UL/CSA		600 V AC / 600 V DC	250V AC / 250V DC
Pilot duty		B600, Q600	B300, R300
AC thermal rated current		5A	5 A
AC maximum volt-ampere	making	3600	3600 VA
	breaking	360	360 VA
DC thermal rated current		2.5 A	2.5 A
DC maximum volt-ampere	making	69 VA	28 VA
	breaking		

Undervoltage Release Specifications

Attribute		Value
Standards compliance	IEC	IEC/EN 60947-1, IEC/EN 60947-5-1
	UL/cULus	UL 60947-4-1, CAN/CSA22.2 No. 60947-4-1
Rated control supply voltage **Rated frequency**		See Catalog page F120.4
Operating voltage	Tripping	0.35...0.7 x U_s
	Coil	0.85...1.1 x U_s
Rated impulse withstand voltage	[U_{imp}]	6 kV
Rated insulation voltage	[U_i]	690V
Pollution degree		3
Ambient air temperature	Operation	-25...+60 °C (-13...+140 °F)
	Storage	-50...+80 °C (-58...+176 °F)
Resistance to shock per IEC 60068-2-27		25g / 11 ms
Resistance to vibrations per IEC 60068-2-6		5g / 3...150 Hz
Mounting		left side of Manual Motor Controller

Shunt Trip Specifications

Attribute		Value
Standards compliance	IEC	IEC/EN 60947–1, IEC/EN 60947-5-1
	UL/cULus	UL 60947-4-1, CAN/CSA22.2 No. 60947-4-1
Rated control supply voltage **Rated frequency**		See Catalog page F120.4
Operating voltage	Tripping	0.7...1.1 x U_s
Rated impulse withstand voltage	[U_{imp}]	6 kV
Rated insulation voltage	[U_i]	690V
Pollution degree		3
Ambient air temperature	Operation	-25...+60 °C (-13...+140 °F)
	Storage	-50...+80 °C (-58...+176 °F)
Resistance to shock per IEC 60068-2-27		15g/11ms
Resistance to vibrations per IEC 60068-2-6		5g / 3...150 Hz
Mounting		left side of Manual Motor Controller

Terminal Connections

Connection			No. of Conductors	Side Mounted	Front Mounted
Wiring	Solid		1 or 2	1...1.5 mm²	1...2.5 mm²
	Flexible with ferrule	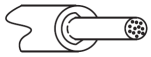	1 or 2	0.75...1.5 mm²	
	Flexible		1 or 2	0.75...1.5 mm²	
	Stranded per UL/CSA		1 or 2	No. 16...14 AWG	
	Stripping length			8 mm (0.31 in.)	
Tightening torques				0.8...1.2 N•m / 7lb•in	
Recommended screwdriver				Pozidriv No.2	

IEC Performance Data

Feeder Terminal and Bus Bar Current Ratings

Attribute		KT5-32-DB-45...,-54..., -63...	KT5-32-A3N...
Rated operational voltage	U_e	690 V	
	U_e per UL/CSA	600V AC	
Rated operational current	I_e	65 A	
	U_e per UL/CSA	60 A	65 A
Suitable for enclosure size	(UL)	200% of Size of KT5 with bus bars	
Rated frequency		50/60 Hz	
Rated impulse withstand voltage	U_{imp}	6 kV	
Rated insulation voltage	U_i	690V AC	

Main Circuit Connecting Characteristics

Connection			No. of Conductors	Value
Wiring	Solid		1	6...25 mm²
	Flexible with ferrule	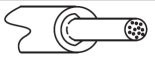	1	6...16 mm²
	Flexible with insulated ferrule		1	6...16 mm²
	Flexible		1	6...16 mm²
	Stranded per UL/CSA		1	No. 10...4 AWG
	Stripping length			10 mm (0.39 in.)
Tightening torques				2.5 N•m / 22 lb•in
Recommended screwdriver				Pozidriv No.2

Weights

Description	Catalog Number	Weight
Motor Controllers	KTA5-32A-0.16A	246 g
	KTA5-32A-0.25A	
	KTA5-32A-0.4A	
	KTA5-32A-0.63A	
	KTA5-32A-1.0A	
	KTA5-32A-1.6A	280 g
	KTA5-32A-2.5A	
	KTA5-32A-4.0A	
	KTA5-32A-6.3A	
	KTA5-32A-10A	
	KTA5-32A-12A	
	KTA5-32A-16A	
	KTA5-32A-20A	330 g
	KTA5-32A-25A	
	KTA5-32A-32A	
Auxiliary contacts - internal mount	KT5-PE1-11	20 g
	KT5-PE1-10	16 g
	KT5-PE1-01	16 g
	KT5-PE1-20	20 g
Auxiliary contacts - side mount	KT5-PA1-11	80 g
	KT5-PA1-20	
	KT5-PA1-02	
	KT5-PA1-20L	
Trip contacts - side mount	KT5-PAF1-S11	80 g
	KT5-PAF1-S20	
	KT5-PAF1-S02	41 g

Description	Catalog Number	Weight
Undervoltage Trip	KT5-AA-24V	110 g
	KT5-AA-110V	
	KT5-AA-240V	
	KT5-AA-415V	
Shunt Trip	KT5-UA-24V	100 g
	KT5-UA-28V	
	KT5-UA-48V	
	KT5-UA-60V	
	KT5-UA-120V	
	KT5-UA-208V	
	KT5-UA-240V	
	KT5-UA-400V	
	KT5-UA-480V	
	KT5-UA-575V	
Bus Bar connections	KT5-32-DB-45-2	37 g
	KT5-32-DB-45-3	58 g
	KT5-32-DB-45-4	81 g
	KT5-32-DB-45-5	103 g
	KT5-32-DB-54-2	39 g
	KT5-32-DB-54-3	60 g
	KT5-32-DB-54-4	90 g
	KT5-32-DB-54-5	113 g
	KT5-32-DB-63-2	43 g
	KT5-32-DB-63-3	70 g
	KT5-32-DB-63-4	94 g
	KT5-32-DB-63-5	123 g
	KT5-32-A3N	41 g
	KT5-32-A3NH	51 g

Description	Catalog Number	Weight
Blank space cover	KT5-WSN	4 g
Screw adapter	KT5-N45	2 g
Lockable handle	KT5-KN	6 g
Enclosure	KT5-ENY65	428 g
	KT5-ENN65	435 g
Door mounting kit	KT5-DMY65	258 g
	KT5-DMN65	268 g
Door coupling handle	KT5-HCRY	78 g
	KT5-HTC	80 g
Extension shaft	KT5-HT	28 g
	KT5-HTM	50 g
Coupler	KT5-DNC	17 g
	KT5-DNUC	4 g
Shaft alignment ring	KT5-SAR	22 g
Extension shaft support	KT5-SHS	50 g
Connecting module	KT5-32-PEC23	23 g
	KT5-32-PEK12	

KT5 Wiring Example

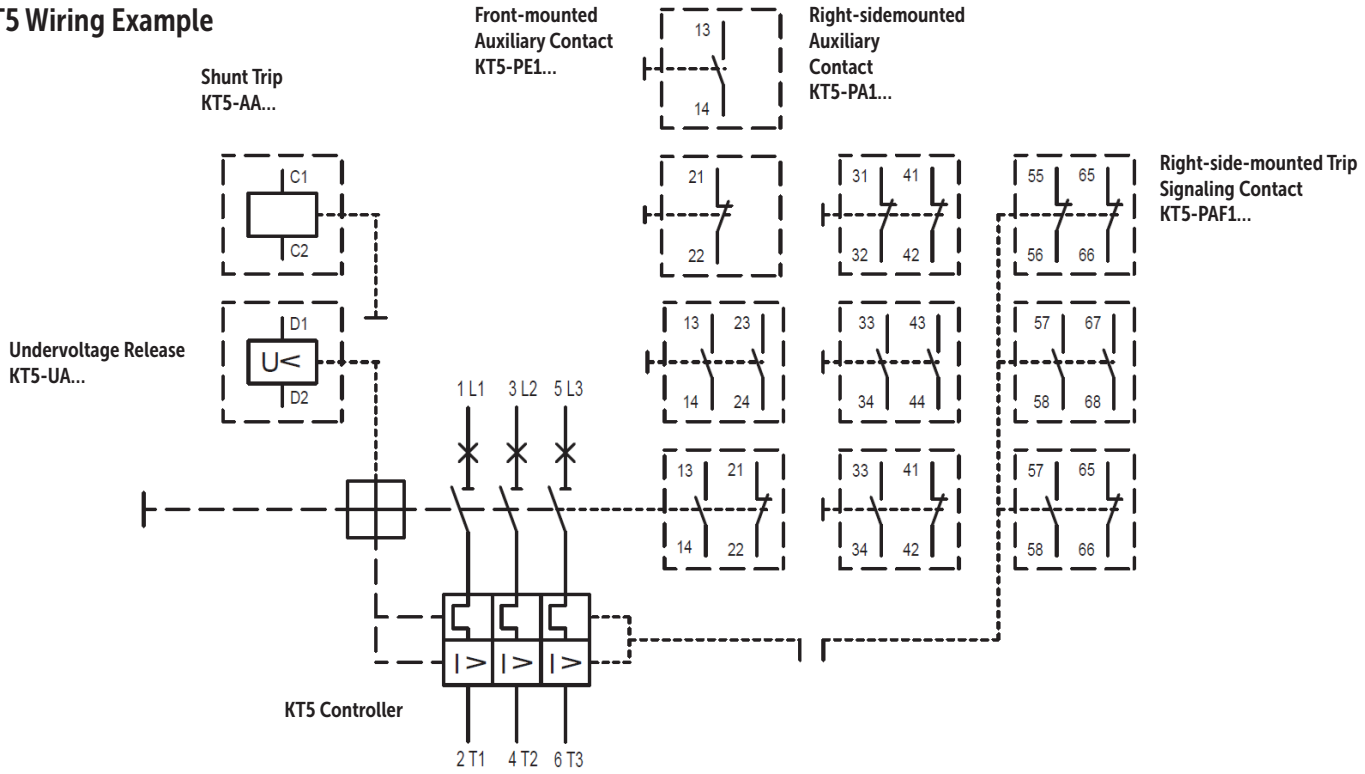

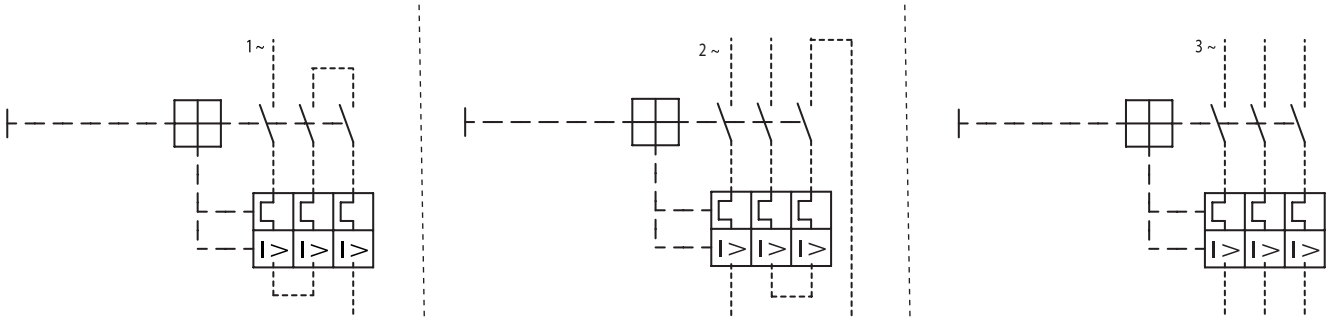

1-phase / < 120V | 1-phase / 240V | 3-phase

KT5 Mounting Position

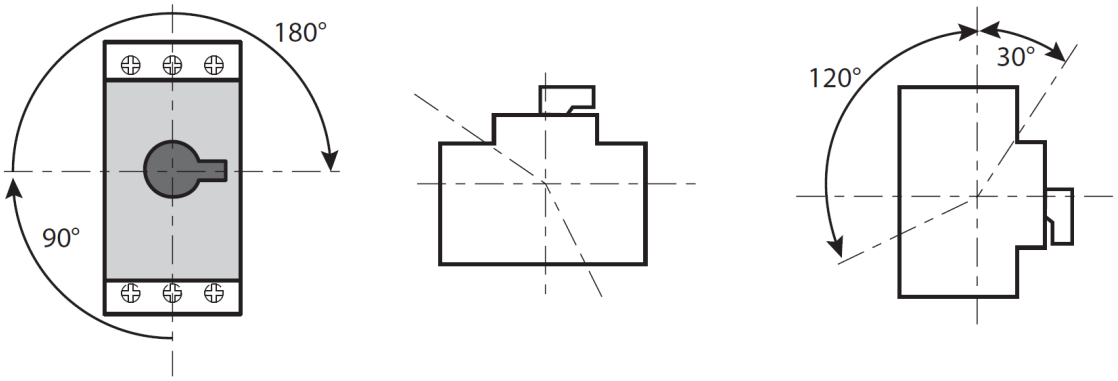

❶ No backup fuse required.

KTA5-32A-0.16A..16A Manual Motor Controller

Dimensions are in millimeters (inches). Dimensions not intended for manufacturing purposes.

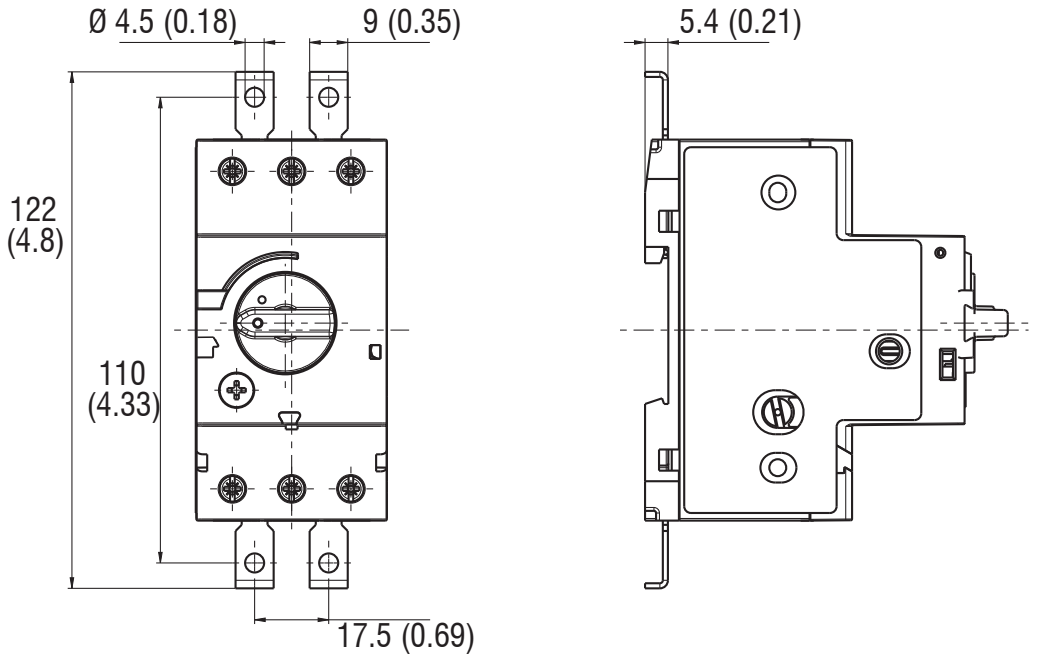

KTA5-32A-0.16A..16A Manual Motor Controller *(with Accessories)*

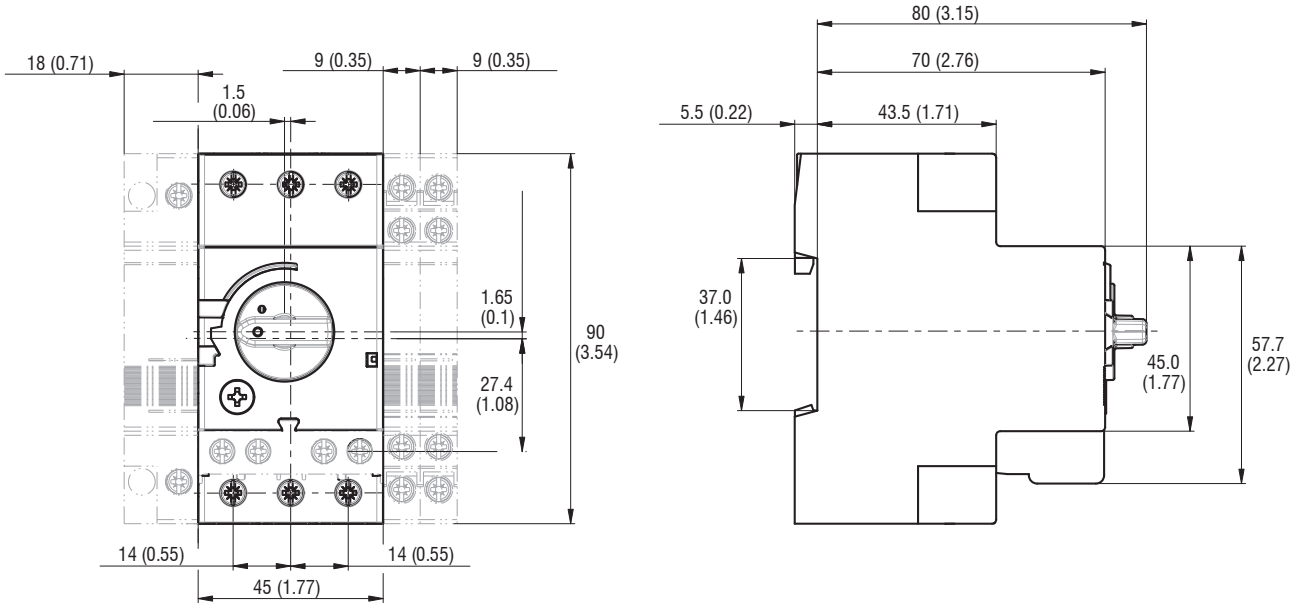

KTA5-32A-20A...32A Manual Motor Controller

Dimensions are in millimeters (inches). Dimensions not intended for manufacturing purposes.

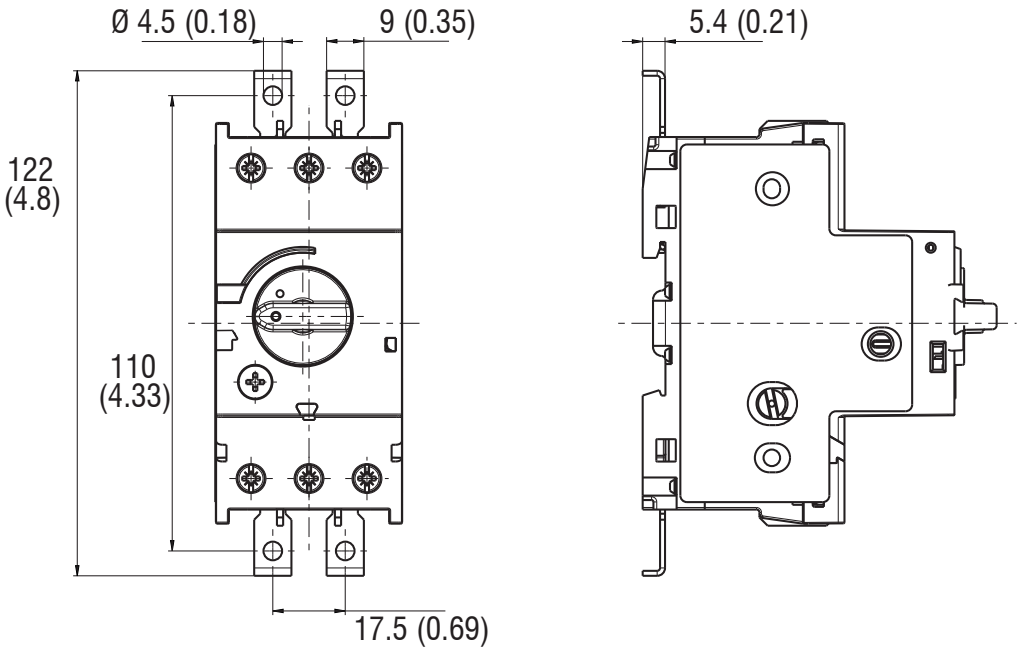
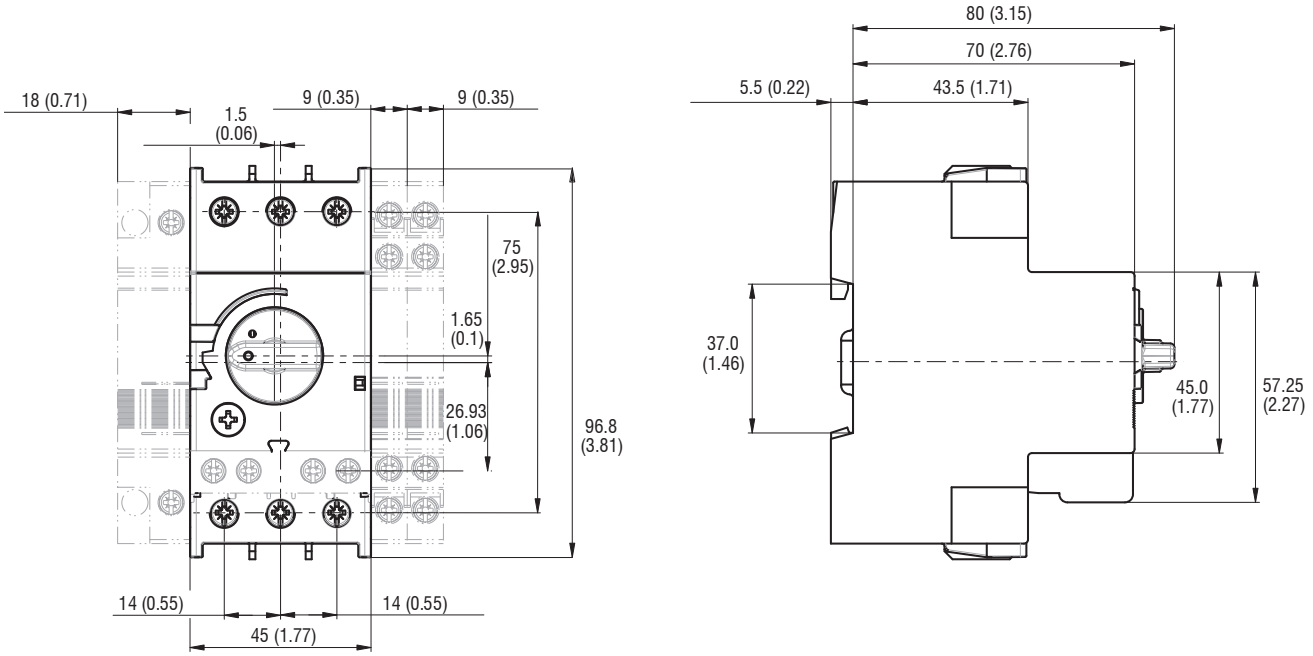
KTA5-32A-20A...32A Manual Motor Controller *(with Accessories)*