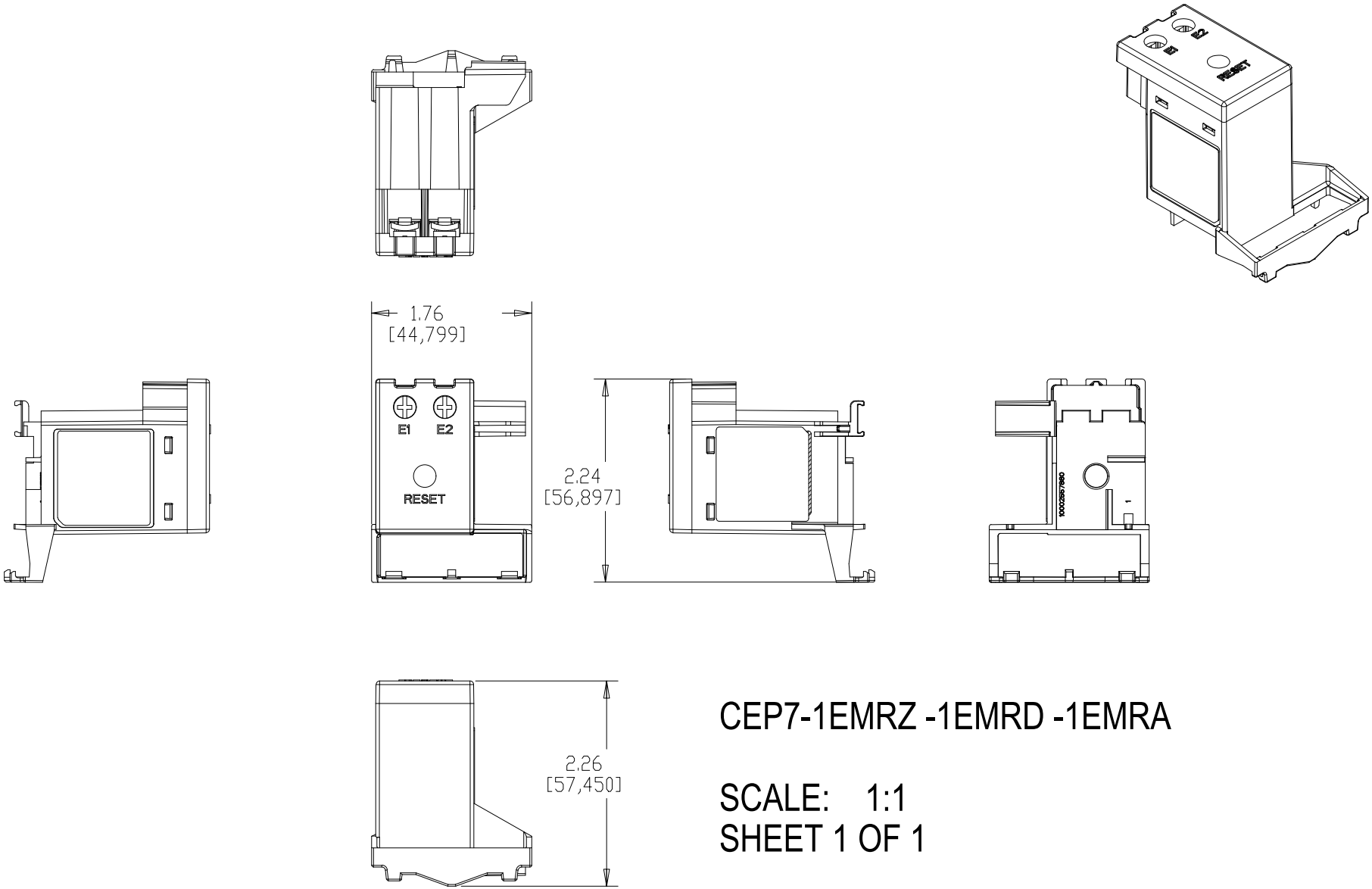

CEP7-1EMRZ -1EMRD -1EMRA

SCALE: 1:1
SHEET 1 OF 1