Installation Instructions

sprecher+schuh

Plastic Enclosures for Starters
Kunststoffgehäuse für Starter
Boîtiers plastiques pour démarreurs
Custodie plasitce per avviatori
Cofres em plástico para arrancadores

(Cat KS8-C0*)

At the end of its life, this equipment should be collected separately from any unsorted municipal waste.

EN / IEC 62208
EN / IEC 60947-4-1
UL 508A
CSA 22.2, No. 14

Attention: To prevent electrical shock, disconnect from power source before installing or servicing. To be commissioned and maintained only by qualified personnel; pay attention to the operating instructions!

Achtung: Vor Installations- oder Servicearbeiten Stromversorgung unterbrechen, um Unfälle zu vermeiden. Inbetriebsetzung und Wartung nur durch Fachpersonal; Betriebsanleitung beachten!

Attention: Avant le montage et la mise en service, couper l'alimentation secteur afin d'éviter tout accident. Mise en service et entretien: seulement par du personnel spécialisé; respecter les instructions d'exploitation!

Attenzione: Per prevenire infortuni, togliere tensione prima dell'installazione o manutenzione. Messa in servizio e manutenzione solo da personale specializzato; attenersi alle istruzioni per l'esercizio!

Atención: Desconectar la alimentación eléctrica antes de realizar el montaje y la puesta en servico, con el objeto de evitar accidentes. Puesta en servicio y mantenimiento exclusivamente por personal especializado; respetar las instrucciones de puesta en servicio y mantenimiento!

START / STOP Push Buttons

RESET Push Button

sprecher+schuh

KS8-C0S4 with START / STOP Push Buttons

1

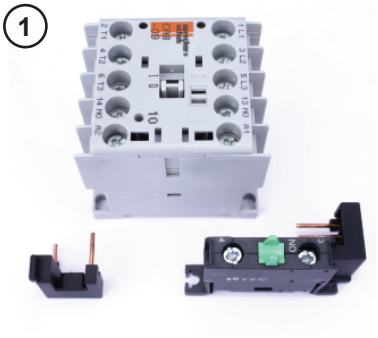

2

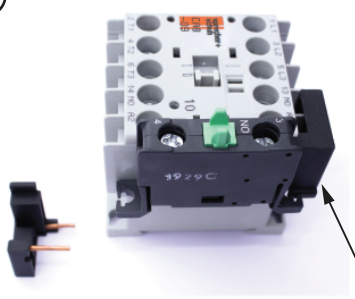

3

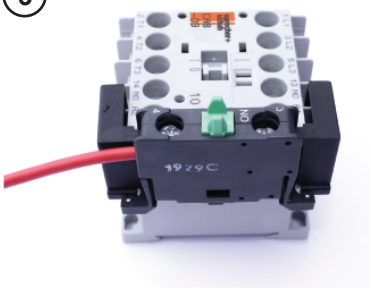

LA2-KS8-PLA

Replace connection module
Verbindungsmodul austauschen
Remplacer le module de connexion
Sostituire il modulo di collegamento
Reemplace el módulo de conexión

4

5

KS8-C0S1 with RESET Push Button

IMPORTANT NOTICE:

- In case of a separate control voltage circuit place the included warning label in the appropriate language on the front of the enclosure.
- Bei separater Steuerspannung ist das mitgelieferte Warnschild in der passenden Sprache auf der Frontseite des Gehäuses anzubringen.
- En cas d'une tension de commande séparée, placer l'étiquette d'avertissement incluse, dans la langue appropriée, sur la face du boîtier.
- In caso di tensione di di controllo separata posizionare l'etichetta d'avvertimento inclusa, nella lingua appropriata sulla parte anteriore della custodia.
- En caso de una tensión de circuito de control separado, colocar la etiqueta de advertencia incluido en el idioma adecuado en la parte frontal del cofre.

Accessories

LA2-KS8-PLA

- Push button latch for maintained control
- Drucktasten-Verklinkung für Dauerkontakt-Steuerung
- Accrochage des bouton-poussoirs pour commande de contact permanent
- Ritenuta di pulsante per comando a contatto permanente
- Retención de pulsador para mando a contacto permanente

Instructions to convert Starter to Maintained Control

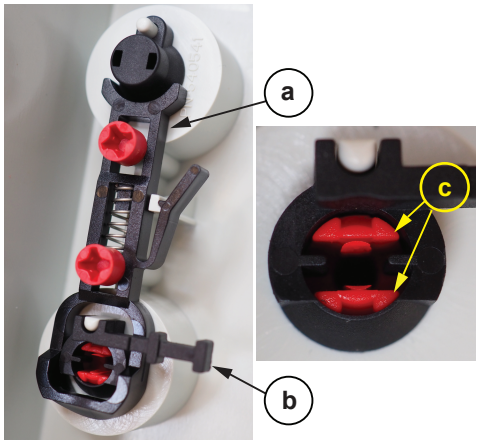

1. Before installing the Maintained Control latch assembly(a), remove the snap-in arm temporarily (b).
2. To remove snap-in arm, compress two red tabs together (c).
3. Install LA2-KS8-PLA Maintained Control push button latch assembly.
4. Re-install snap-in arm that was removed in Step 1.

KS7-PNT

- Neutral Terminal
- Neutralleiterklemme
- Borne de neutre
- Morsetto di neutro
- Borna de neutro

Dimensions

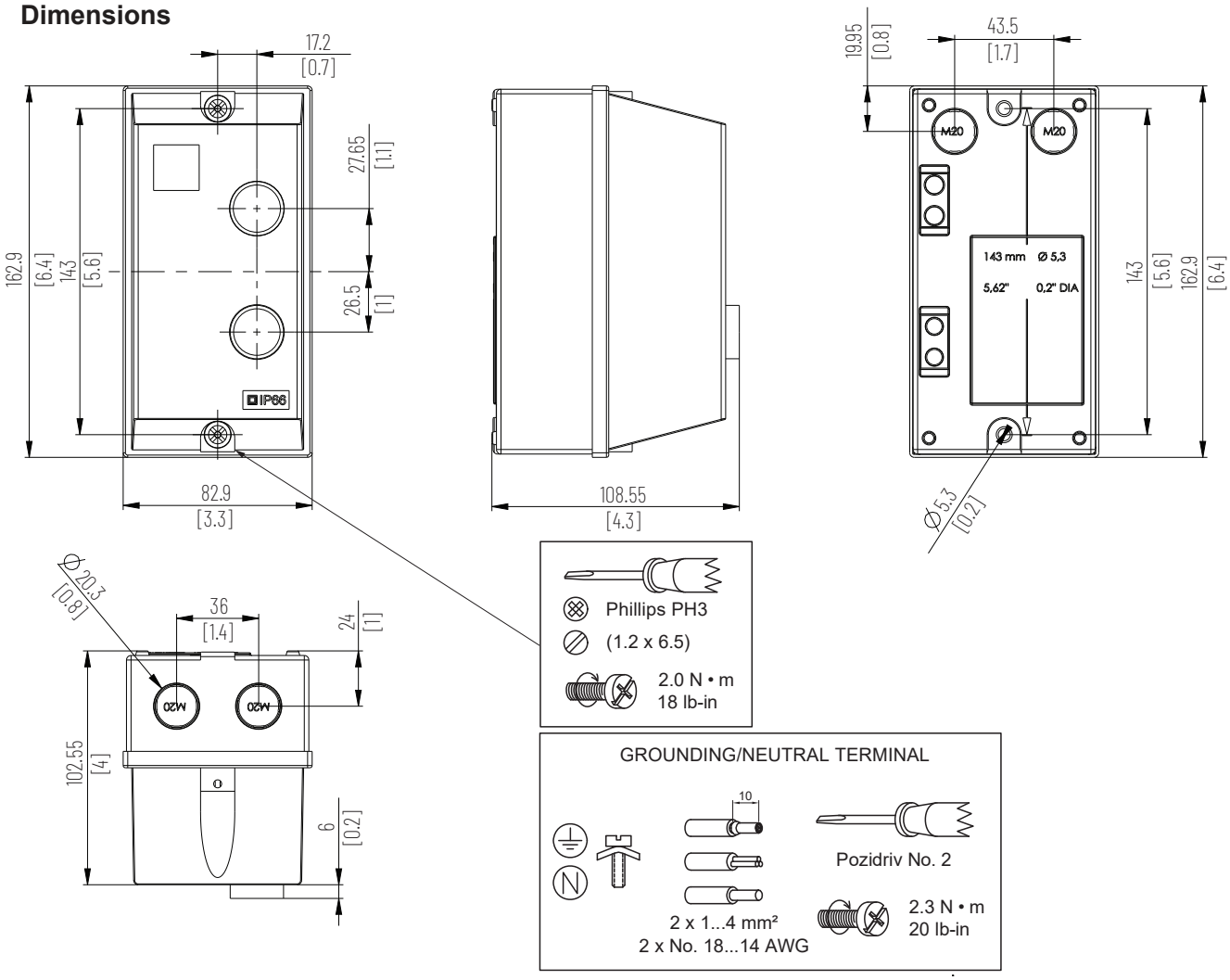

Wiring Diagrams

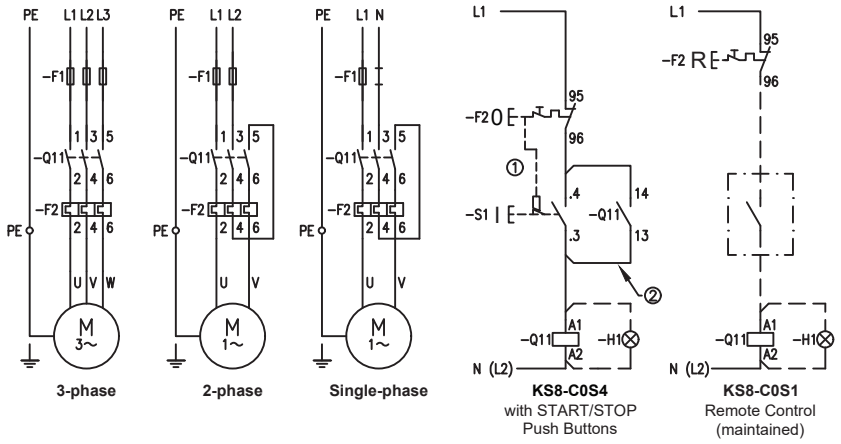

①Option mechanical latch LA2-KS8-PLA for maintained control
②Not wired when mechanical latch LA2-KS8-PLA is installed

KS8-C0S....
cULus Listed Type 4 / 4X / 12K Enclosure

c UL us LISTED A-1217 ICP

WARNING:
BONDING BETWEEN METALLIC CONDUITS MUST BE PROVIDED. DEVICE IS NOT SUITABLE FOR USE WITH RIGID METAL CONDUIT FOR UL APPLICATION.

AVERTISSEMENT:
UNE LIAISON ÉLECTRIQUE DOIT ÊTRE ASSURÉE ENTRE LES CONDUITS MÉTALLIQUES. LE DISPOSITIF NE PEUT ÊTRE UTILISÉ AVEC DES CONDUITS MÉTALLIQUES RIGIDES DANS LES APPLICATIONS UL.

SUPPLY CONDUCTOR SIZE (AWG)	BONDING CONDUCTOR	
	QTY.	SIZE
18	1	14
16	1	14
14	1	14
FOR USE WITH PROVIDED GROUNDING ADAPTER KIT		
SEE APPLICABLE CODES AND LAW FOR GROUNDING REQUIREMENTS		

WARNING: The opening of the branch circuit protective device may be an indication that a fault current has been interrupted. To reduce the risk of fire or electric shock, current-carrying parts and other components of the controller should be examined and replaced if damaged.

WARNING: With the mechanical latch (②) installed or when wired for 2-wire control, a motor connected to the circuit may start automatically when the overload relay is in the automatic reset position.

AVERTISSEMENT: L'ouverture du dispositif de protection du circuit de dérivation peut indiquer qu'un courant de défaut à été interrompu. Pour réduire le risque d'incendie ou de choc électrique, les pièces sous tension et autres composants de l'automate doivent être examinés et remplacés si endommagés.

AVERTISSEMENT: Lorsque le dispositif de verrouillage mécanique (②) est installé ou si câblé pour une commande à 2 fils, un moteur raccordé au circuit peut démarrer automatiquement lorsque le relais de surcharge est en position de réinitialisation automatique.

Component Selection for Enclosed Starters

3-phase motors

Components		Overload Current Range		IEC 60947-4-1				UL IEC 60947-4-1				Max. current rating of branch circuit fuse [A]			
				230V 50Hz	400/415V 50Hz	500V 50Hz	690V 50Hz	200V 60Hz	230V 60Hz	460V 60Hz	575V 60Hz	IEC COORDINATION		5kA, 600V	50kA, 600V
Contactor 1) 2)	Overload Relay 3)	Min A	Max A	kW	kW	kW	kW	Hp	Hp	Hp	Hp	TYPE 1	TYPE 2	Max. Fuse Class K5/RK5	Max. Fuse Class CC, J
CA8-09-10-*	CT8-A16	0.10	0.16				0.06					35	1	1	1
CA8-09-10-*	CT8-A25	0.16	0.25		0.06		0.06...0.09					35	1	1	1
CA8-09-10-*	CT8-A40	0.25	0.40		0.09	0.09...0.12	0.12...0.18					35	2	1	1
CA8-09-10-*	CT8-A50	0.35	0.50	0.06	0.12							35	2	2	2
CA8-09-10-*	CT8-A63	0.45	0.63			0.18	0.25					35	2	2	2
CA8-09-10-*	CT8-A80	0.55	0.80	0.12	0.18	0.25	0.37					35	4	3	3
CA8-09-10-*	CT8-B10	0.75	1.00		0.25	0.37	0.55				1/2	35	4	3	3
CA8-09-10-*	CT8-B13	0.90	1.30	0.18	0.37		0.75			1/2		35	6	4	4
CA8-09-10-*	CT8-B16	1.10	1.6			0.55					3/4	35	6	5	5
CA8-09-10-*	CT8-B20	1.40	2.0	0.25	0.75	0.75	1.1			3/4	1	35	10	6	8
CA8-09-10-*	CT8-B25	1.80	2.5	0.37		1.1	1.5		1/2	1	1-1/2	35	20	10	10
CA8-09-10-*	CT8-B32	2.3	3.2	0.55	1.1	1.5	2.2	1/2		1-1/2	2	35	20	12	12
CA8-09-10-*	CT8-B40	2.9	4.0	0.75	1.5				3/4	2		35	20	15	15
CA8-09-10-*	CT8-B48	3.5	4.8			2.2	3	3/4	1		3	35	20	15	15
CA8-09-10-*	CT8-B63	4.5	6.3	1.1	2.2	3	4	1		3		35	20	20	20
CA8-09-10-*	CT8-B75	5.5	7.5	1.5	3	4		1-1/2	1-1/2…2		5	35	20	25	25
CA8-09-10-*	CT8-C10	7.2	10.0	2.2	4	5.5	5.5	2	3	5		35	20	35	30
CA8-12-10-*	CT8-C12	9.00	12.5	3	5.5		5.5			7-1/2	7-1/2	35	20	50	30

1) To complete the Catalog No., replace * by the coil voltage code
2) CA8-12-10* available only with AC coils.
3) CT8-*: Thermal overload relays. Max. environmental temperature 40ºC (outside the enclosure).

Component Selection for Single-phase Motor Starters

With Thermal Overload Relays CT8

Components		Overload Current Range		IEC 60947-4-1	UL IEC 60947-4-1			Max. current rating of branch circuit fuse [A]			
				230V 50Hz	115V 60Hz	200V 60Hz	230V 60Hz	IEC COORDINATION		5kA, 600V	50kA, 600V
Contactor 1) 2)	Overload Relay 3)	Min A	Max A	kW	Hp	Hp	Hp	TYPE 1	TYPE 2	Max. Fuse Class K5/RK5	Max. Fuse Class CC, J
CA8-09-10-*	CT8-A16	0.10	0.16	--	--	--	--	35	1	1	1
CA8-09-10-*	CT8-A25	0.16	0.25	--	--	--	--	35	1	1	1
CA8-09-10-*	CT8-A40	0.25	0.40	0.06	--	--	--	35	2	1	1
CA8-09-10-*	CT8-A50	0.35	0.50	--	--	--	--	35	2	2	2
CA8-09-10-*	CT8-A63	0.45	0.63	0.09	--	--	--	35	2	2	2
CA8-09-10-*	CT8-A80	0.55	0.80	0.12	--	--	--	35	4	3	3
CA8-09-10-*	CT8-B10	0.75	1.0	--	--	--	--	35	4	3	3
CA8-09-10-*	CT8-B13	0.90	1.3	0.18	--	--	--	35	6	4	4
CA8-09-10-*	CT8-B16	1.1	1.6	--	--	--	1/10	35	6	5	5
CA8-09-10-*	CT8-B20	1.4	2.0	0.25	--	--	1/8	35	10	6	8
CA8-09-10-*	CT8-B25	1.8	2.5	0.37	--	--	1/6	35	20	10	10
CA8-09-10-*	CT8-B32	2.3	3.2	0.55	1/10	1/6	1/4	35	20	12	12
CA8-09-10-*	CT8-B40	2.9	4.0	0.75	1/8	1/4	1/3	35	20	15	15
CA8-09-10-*	CT8-B48	3.5	4.8	--	1/6	1/3		35	20	15	15
CA8-09-10-*	CT8-B63	4.5	6.3	1.1	1/4	1/2	1/2	35	20	20	20
CA8-09-10-*	CT8-B75	5.5	7.5	1.5	1/3		3/4	35	20	25	25
CA8-09-10-*	CT8-C10	7.2	10.0	2.2		3/4…1	1	35	20	35	30
CA8-12-10-*	CT8-C12	9.0	12.5	--	1/2	1 1/2	1 1/2	35	20	50	30

1) To complete the Catalog No., replace * by the coil voltage code
2) CA8-12-10* available only with AC coils.
3) CT8-*: Thermal overload relays. Max. environmental temperature 40ºC (outside the enclosure).

Coil voltage table

AC Coil Code	Voltage Range	
	50 Hz	60 Hz
12	12V	12V
24Z	24V	24V
48Z	48V	48V
120	110V	120V
208	200V-220V	208V-220V
240	240V	240V
380	Use Coil Code 400	
400	400V	400V
480	440V	480V
575	Use Coil Code 600	
600	525V	600V

DC Coil Code	Voltage Range
12D	12V
24D	24V
110D	110V
125D	125V
220D	220V

Sprecher + Schuh maintains current product environmental information on website at http://www.sprecherschuh.com/library/approvals/compliance.html

Power, Control and Information Solutions Headquarters

Sprecher + Schuh, 15910 Int. Plaza Dr., Houston, TX 77032, USA

EEE Yönetmeliğine Uygundur

Publication **KS8-IN001B-EN-P - March 2022, Supersedes KS8-IN001A-EN-P - May 2020**

DIR 10005424981**(Version 02)**

Copyright © 2022 Sprecher+Schuh, Inc. All Rights Reserved. Printed in Spain.